NETAFIM™
An Orbia business.

GrowSphere™
Operating System



GrowSphere™ FLEX

User Manual

V2 September 2026

What is in the BOX

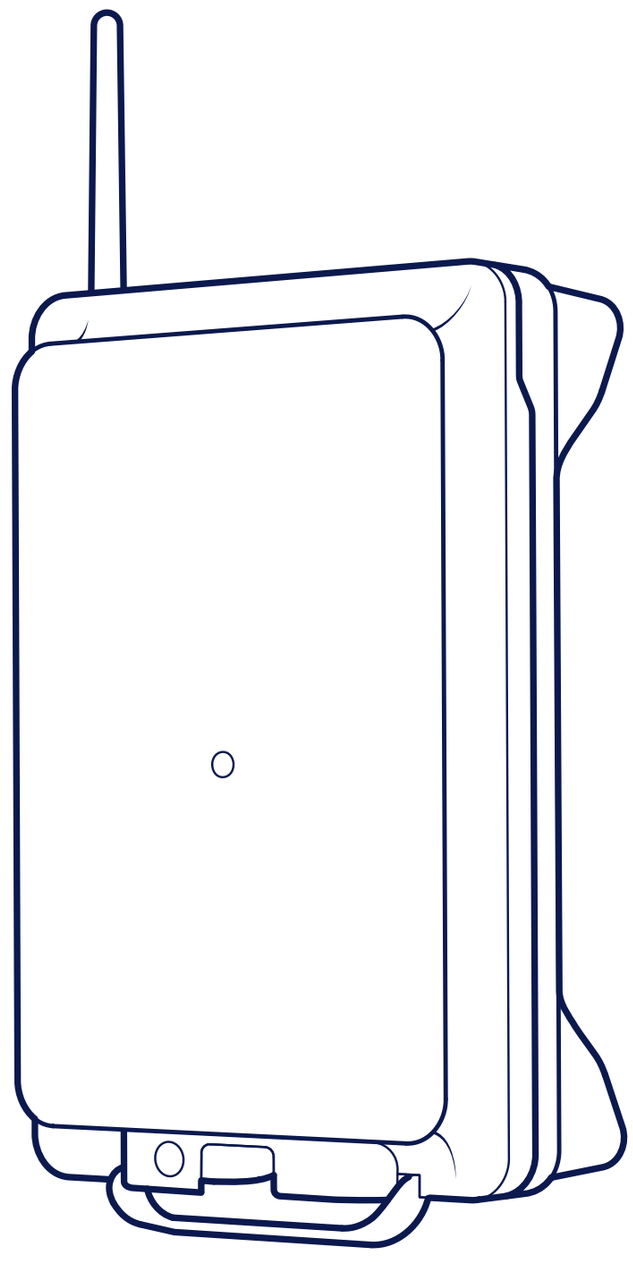

GrowSphere™ FLEX

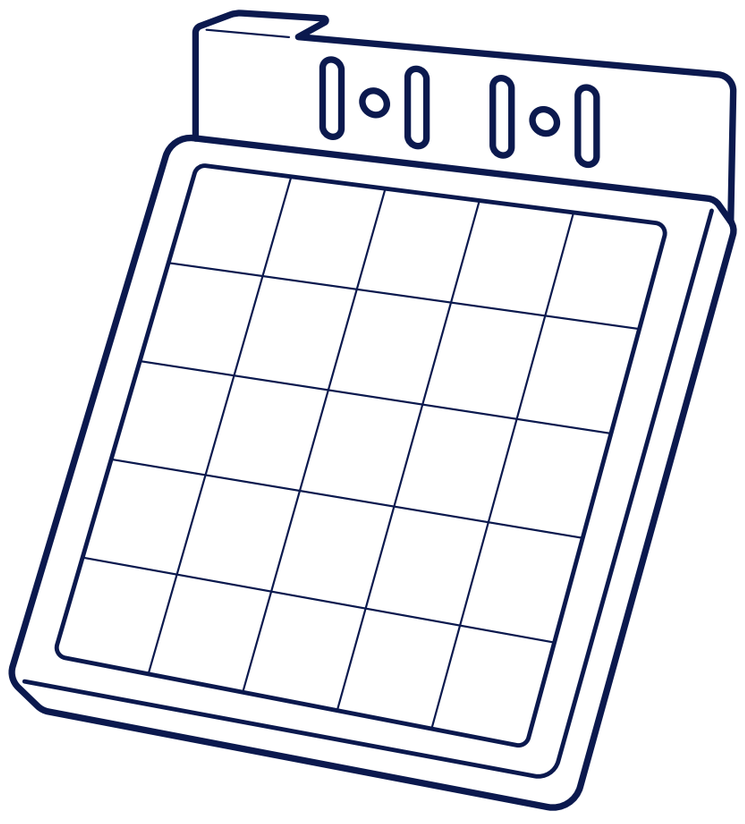

*** Optional –**
External solar panel
5.5W or 11W if needed
+ 5m extension cable

We’re always happy to help!
Get in touch with our Support Team
and we’ll guide you every step of the way.”

What is in the BOX

Accessories Kit:



Antena



Bird spikes



Base plate

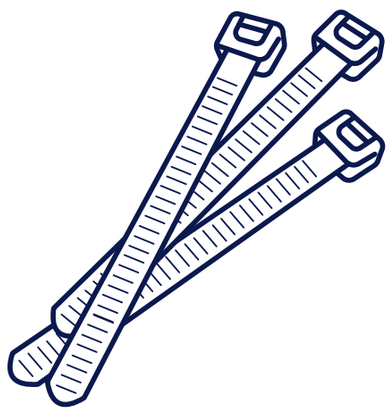

Plastic bands

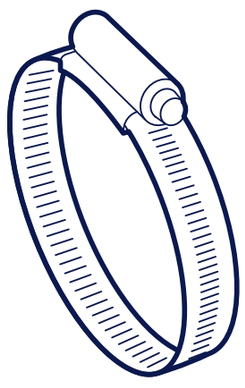

Metal
cable ties

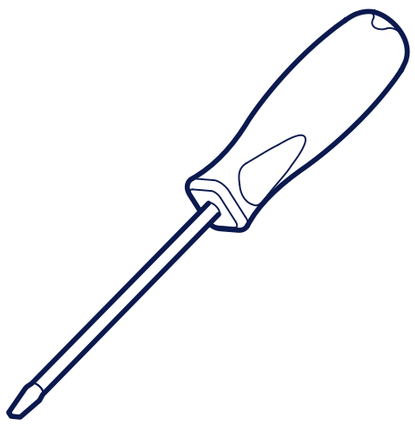

Flat
screwdriver
2x50mm

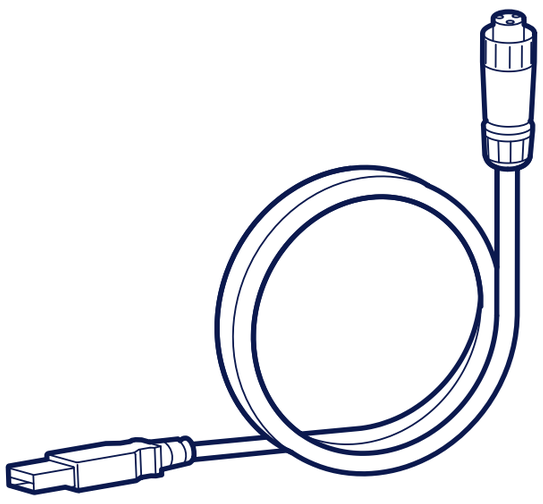

Charging
cable

Supported Devices and Features

Mainline	1
Valves	Up to 16 local DC or AC* valves
Irrigation by	Time/quantity
Dosing channels	4
Connection to internet	Cellular
Digital inputs	8
Analog inputs	4

* AC valve requires a DC to AC RELAY BOX or CARD sold separately

Programs, Shifts and Recipes

Irrigation programs	8
Shifts per program	8
Dosing methods	Bulk, Spread, or Proportional
Dosing recipes	8

Battery Description

Nominal capacity	5200 mAh
Nominal voltage	3.7V
Charger input	5.5-7.8V (Up to 1A)

Installation Preparation

1. Charge the unit before installation

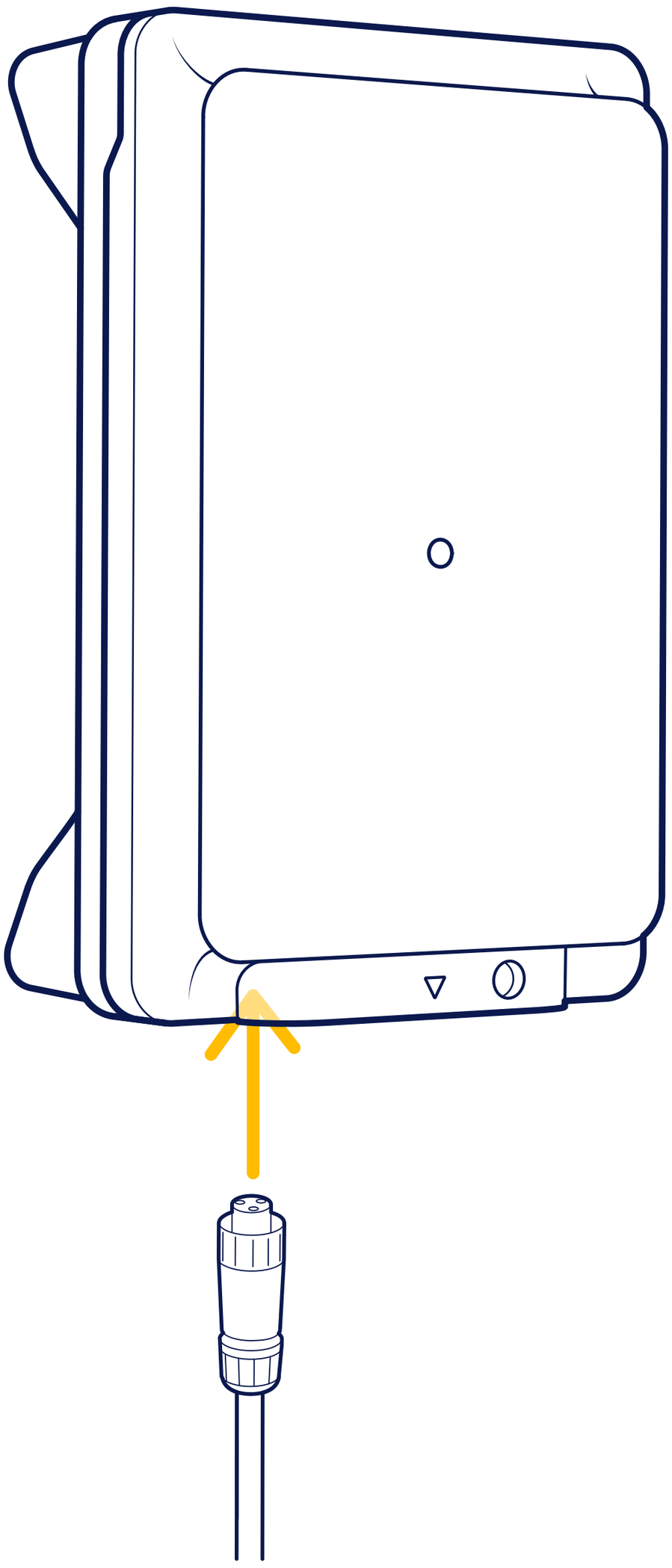

Charging cable

*Only the charging cable is included. The USB power adapter is not supplied

Or

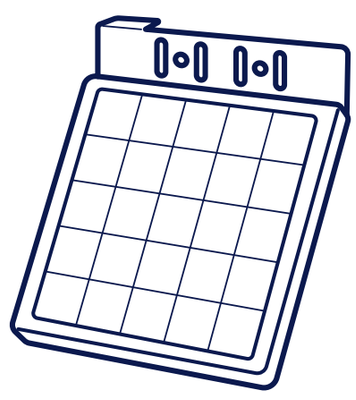

External solar panel 5.5W
+5m extension cable

Installation Preparation

2. Connect the antenna to the device

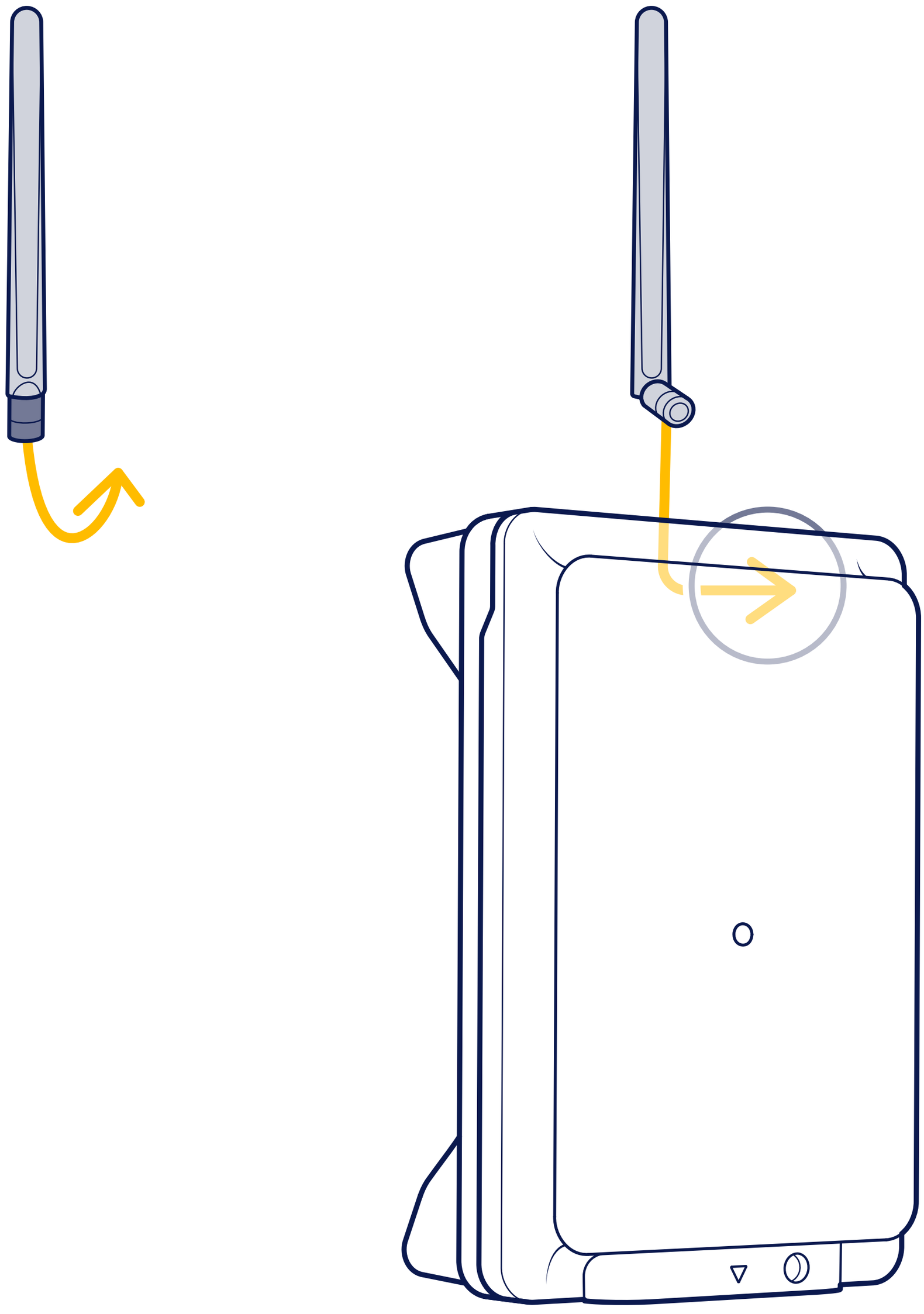

Installation Preparation

3. Open the device

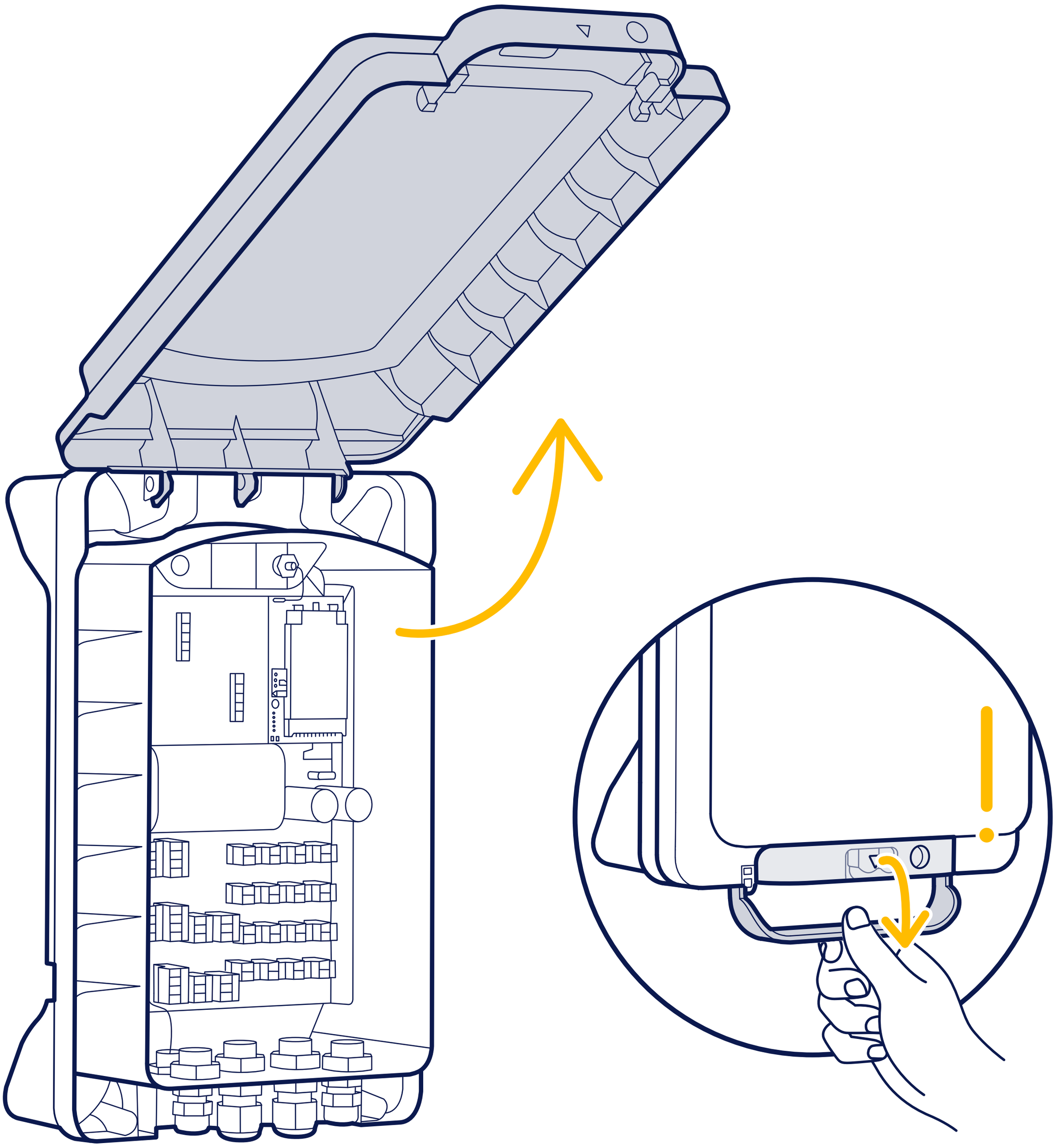

Installation Preparation

4. Insert SIM card (not included)
Note: The device requires a Data-only SIM card.
Voice and SMS capabilities are not required

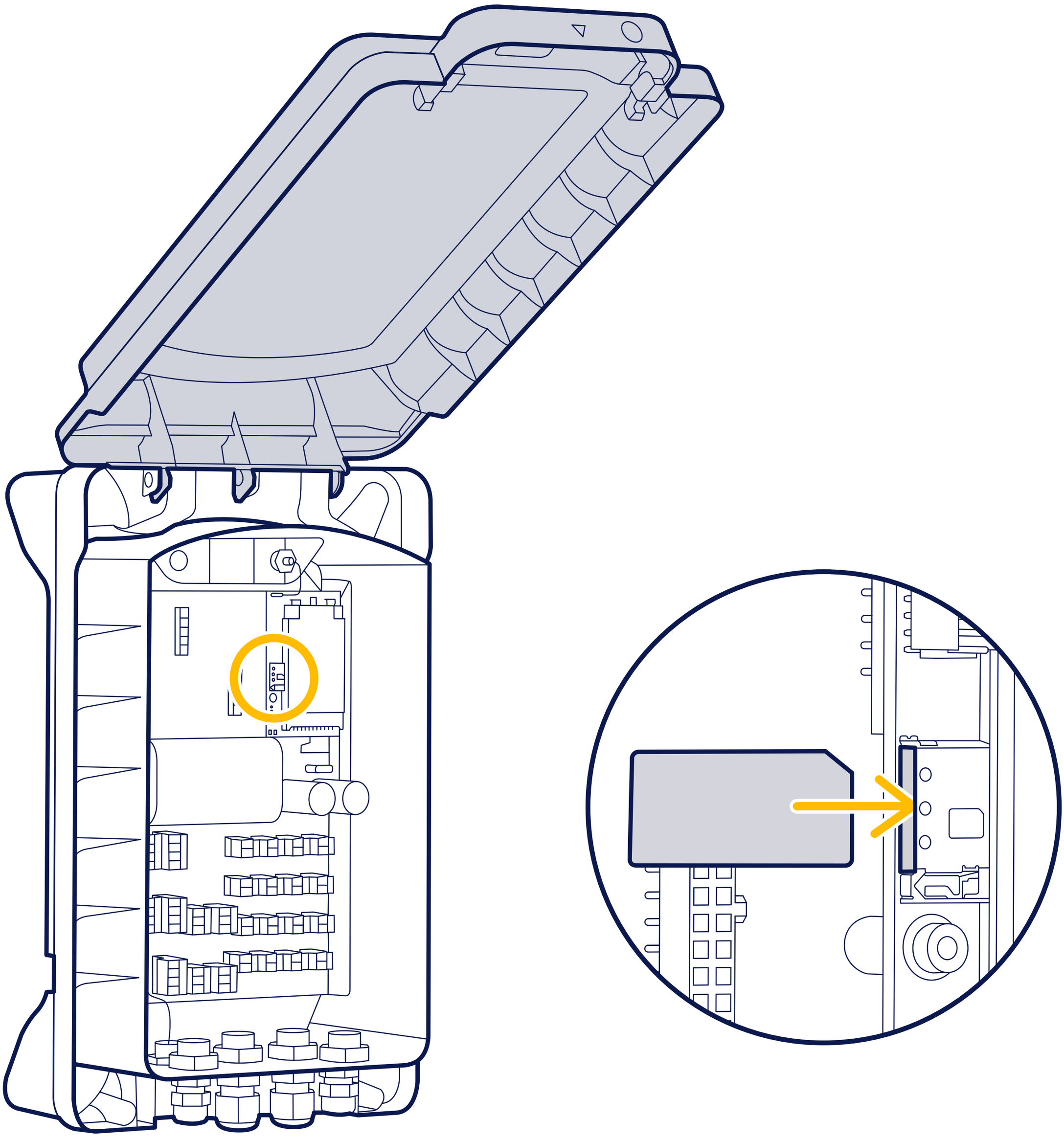

Supported devices

Wire all your devices to the relevant ports (see supported devices below)

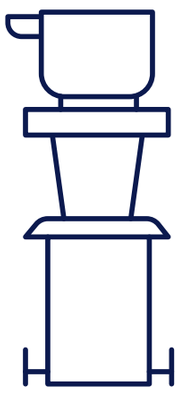

Pump x1

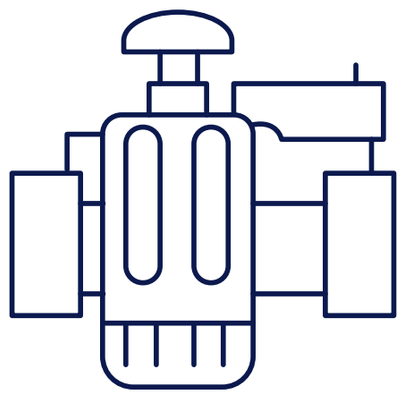

DC latch valves x16

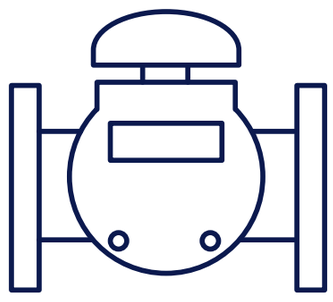

Water meter x1

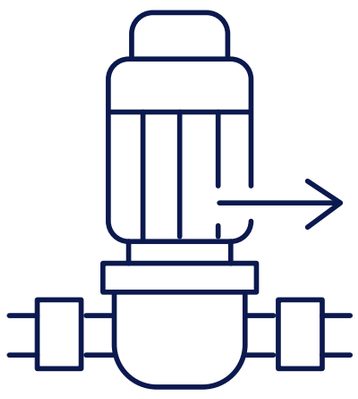

Dosing channels x4

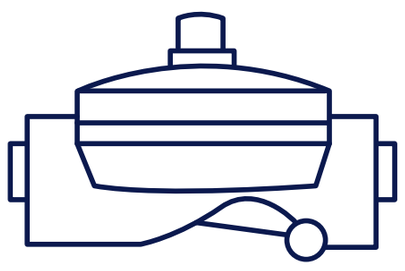

Main valve x1

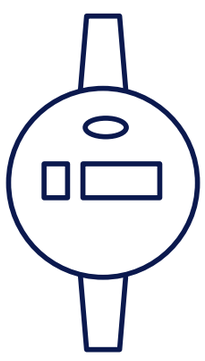

Dosing meter x4

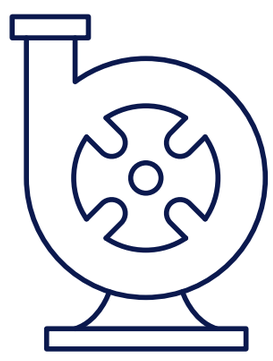

Booster pump x1

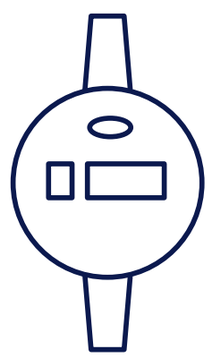

Preasure sensor x1

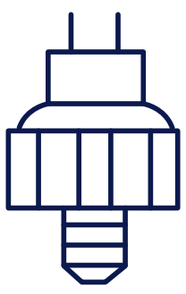

irrigation pressure switch x1

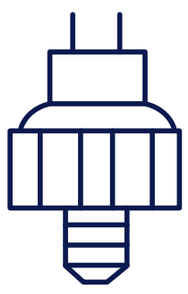

Dosing pressure switch x1

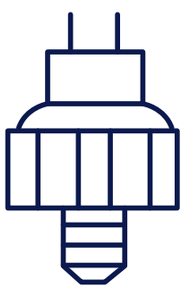

dry contact switch x1

Supported devices may be connected in any combination, up to 16 outputs total (pump, valves, main valves, dosing chanels, booster pump).

Know your GrowSphere™ FLEX

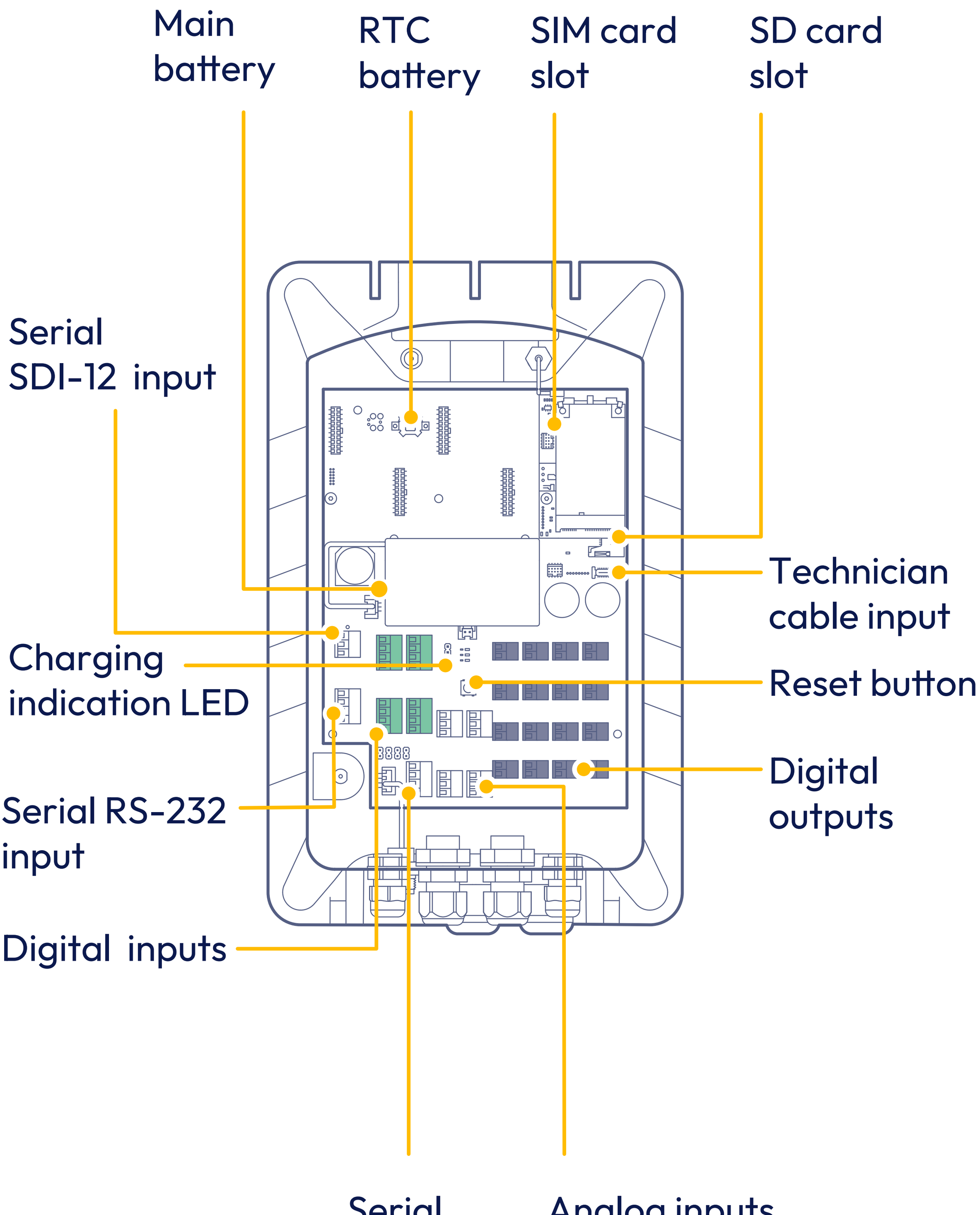

Wire your GrowSphere™ FLEX

Digital Input - General info

- Each digital input terminal includes a:
  - Shared ground (–)

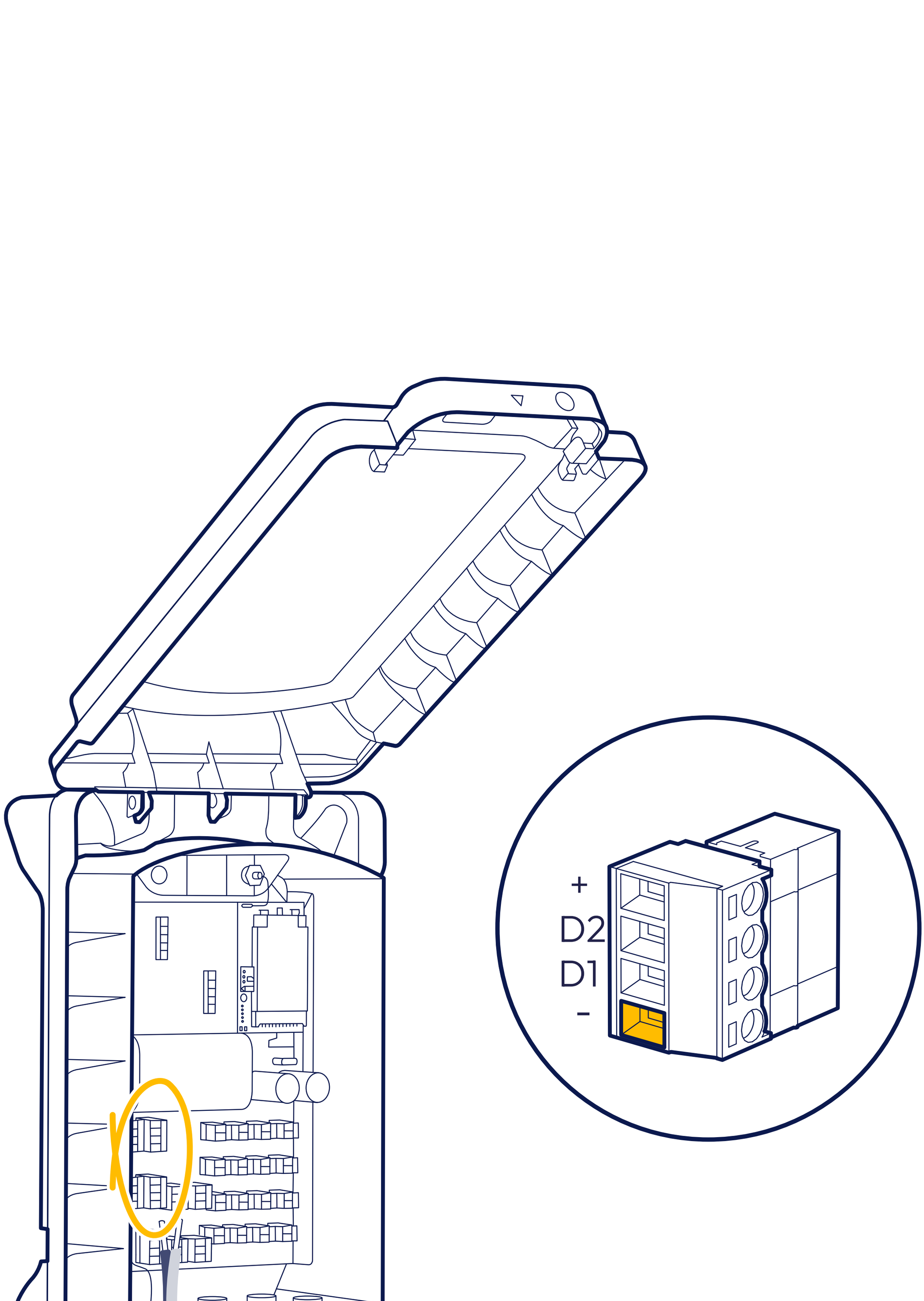

Wire your GrowSphere™ FLEX

Digital Input - General info

- Each digital input terminal includes a:
  - Shared ground (–)
  - A dedicated positive input for D1, D2, and so on

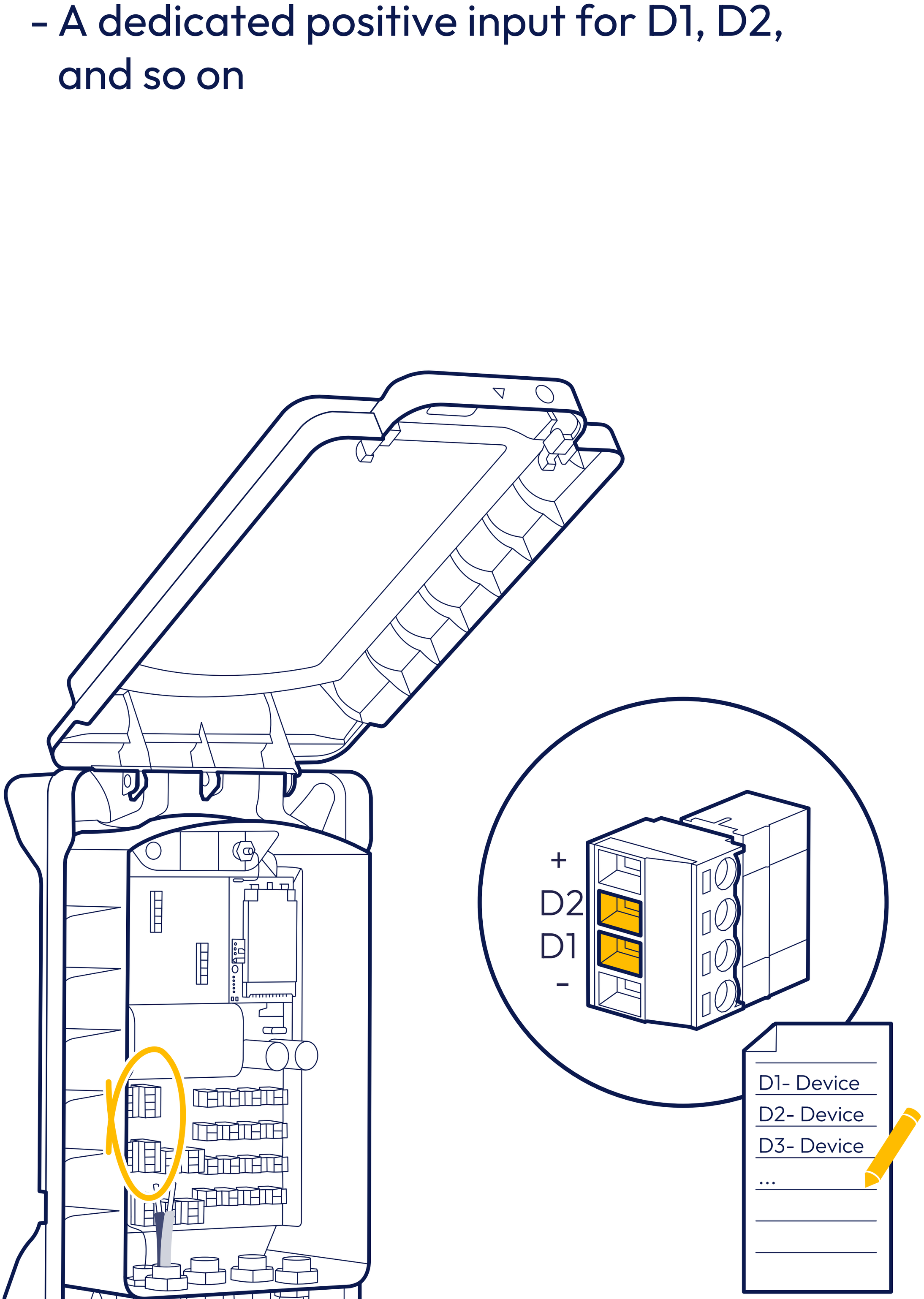

Wire your GrowSphere™ FLEX

Digital Input - General info

- Each digital input terminal includes a:
  - Shared ground (–)
  - A dedicated positive input for D1, D2, and so on.
  - An auxiliary (+) supply to power active devices that require a power source (devices such as ultrasonic water meters, avilable in future versions)

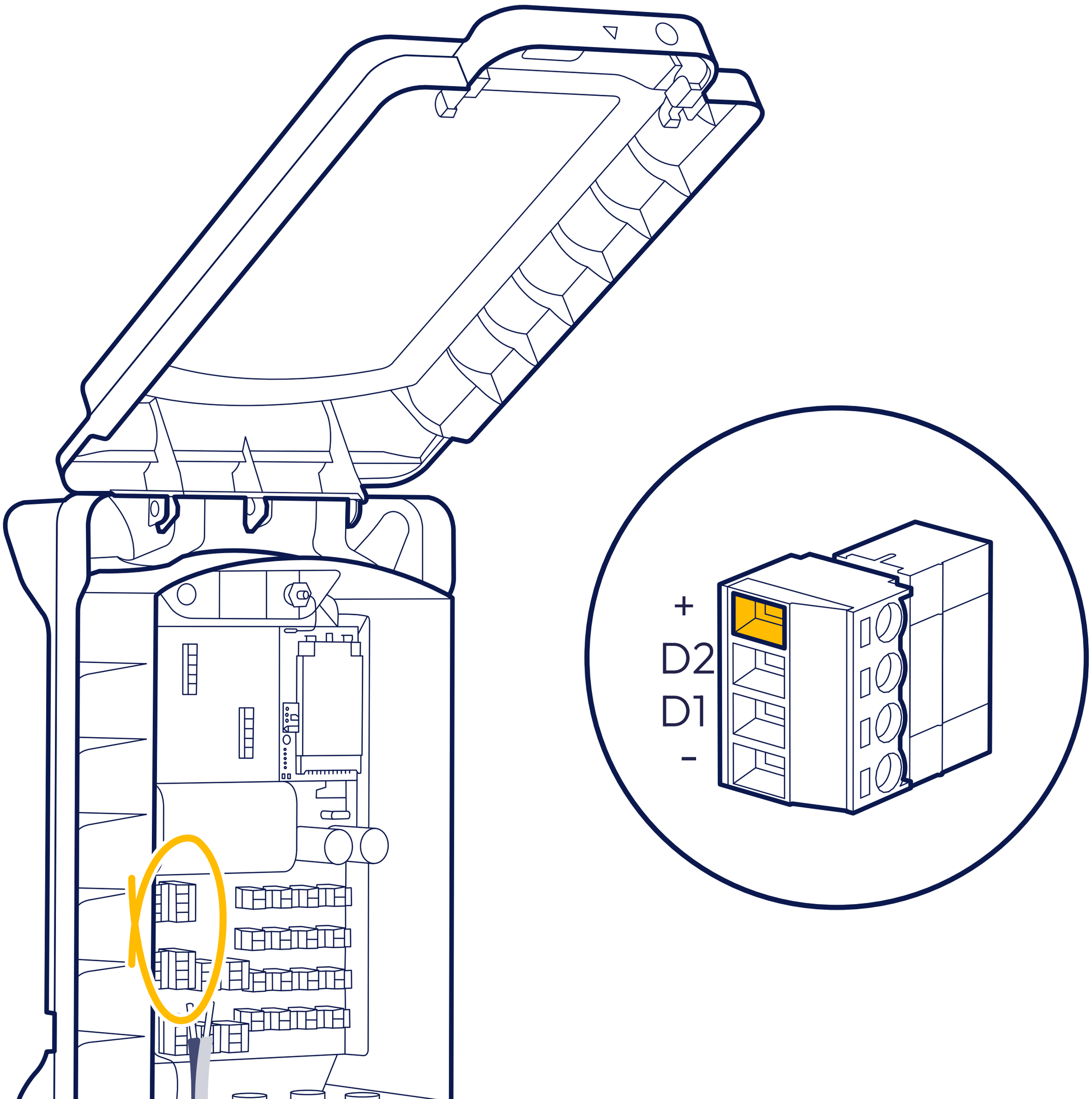

Wire your GrowSphere™ FLEX

Digital Input - General info

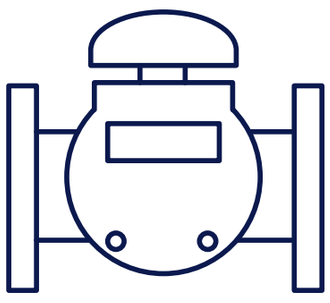

Water meter x1

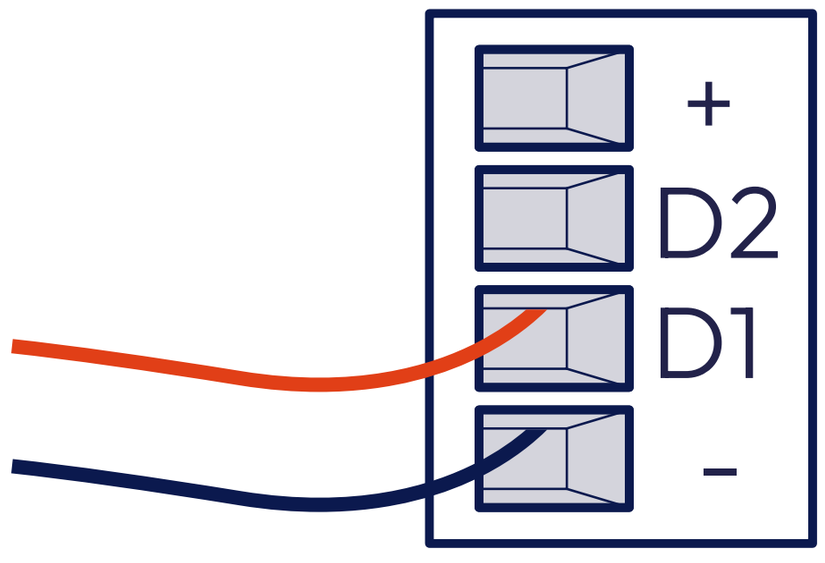

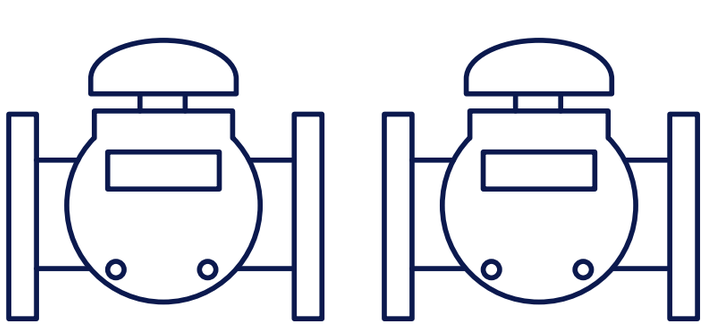

Water meter x2

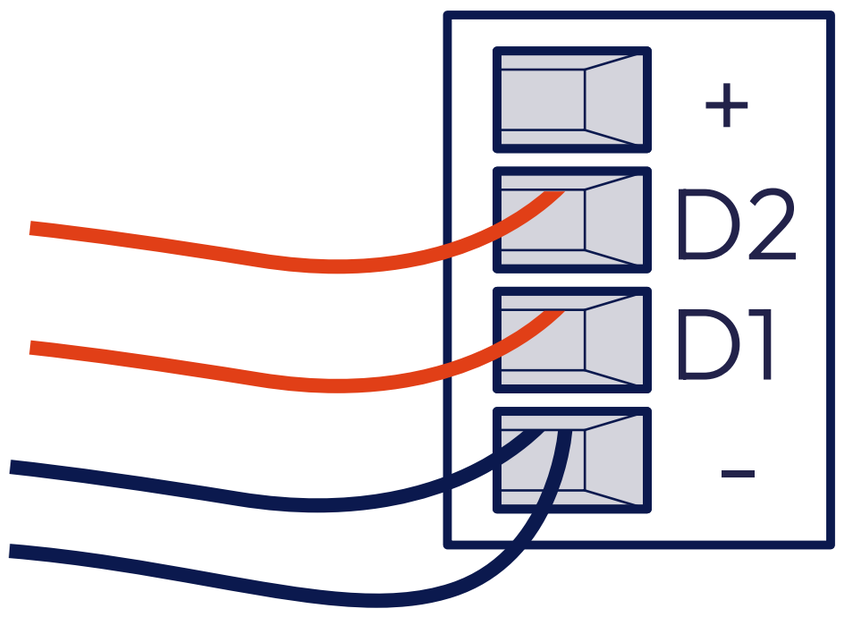

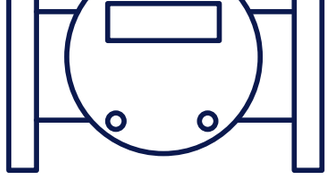

Ultrasonic
Water meter x1

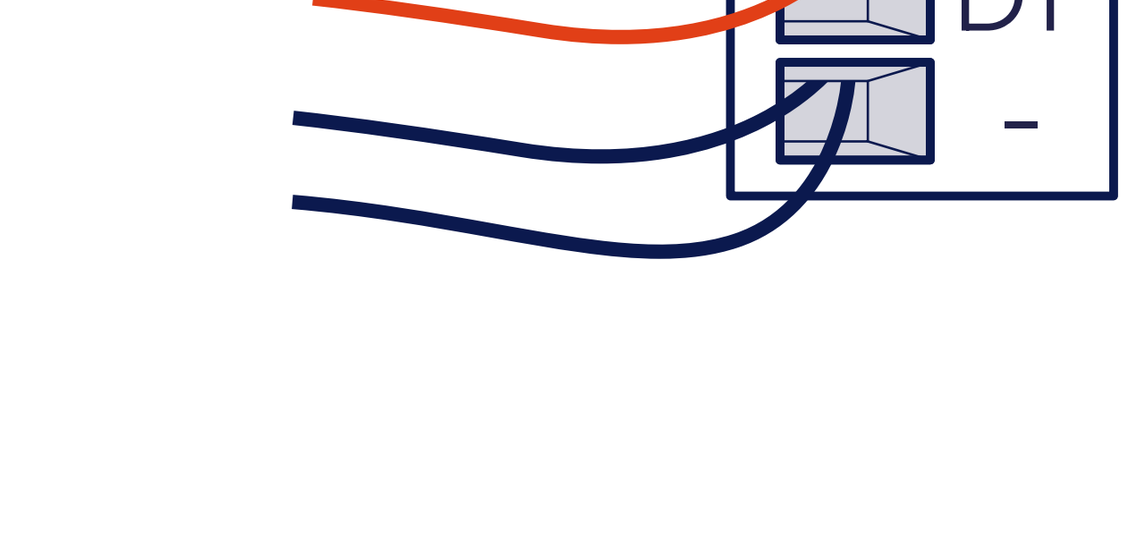

Wire your GrowSphere™ FLEX

Digital Input - Wiring

1. Take out a cork

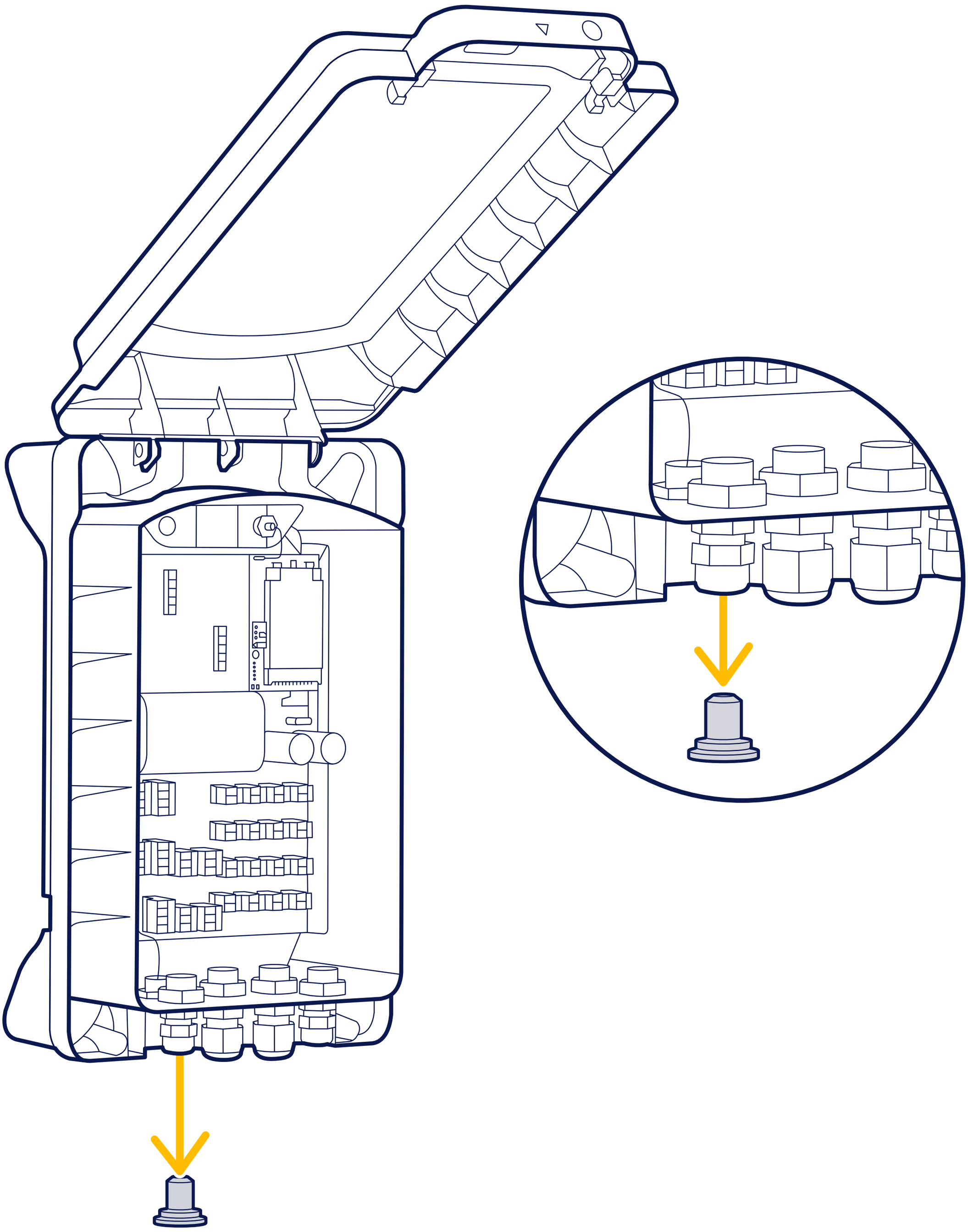

Wire your GrowSphere™ FLEX

Digital Input - Wiring

2. Insert the wires

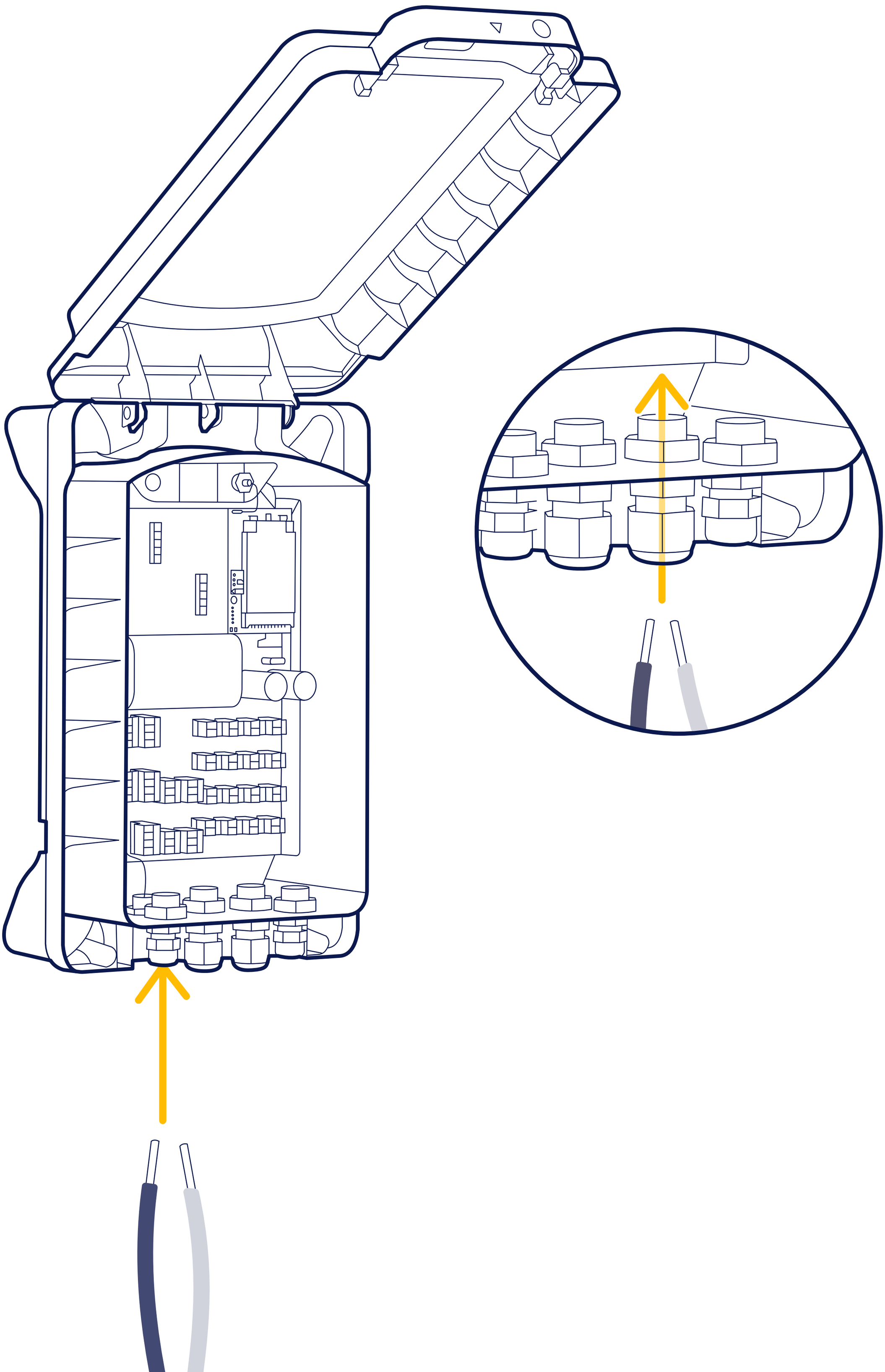

Wire your GrowSphere™ FLEX

Digital Input – Wiring

3. Take out the connector

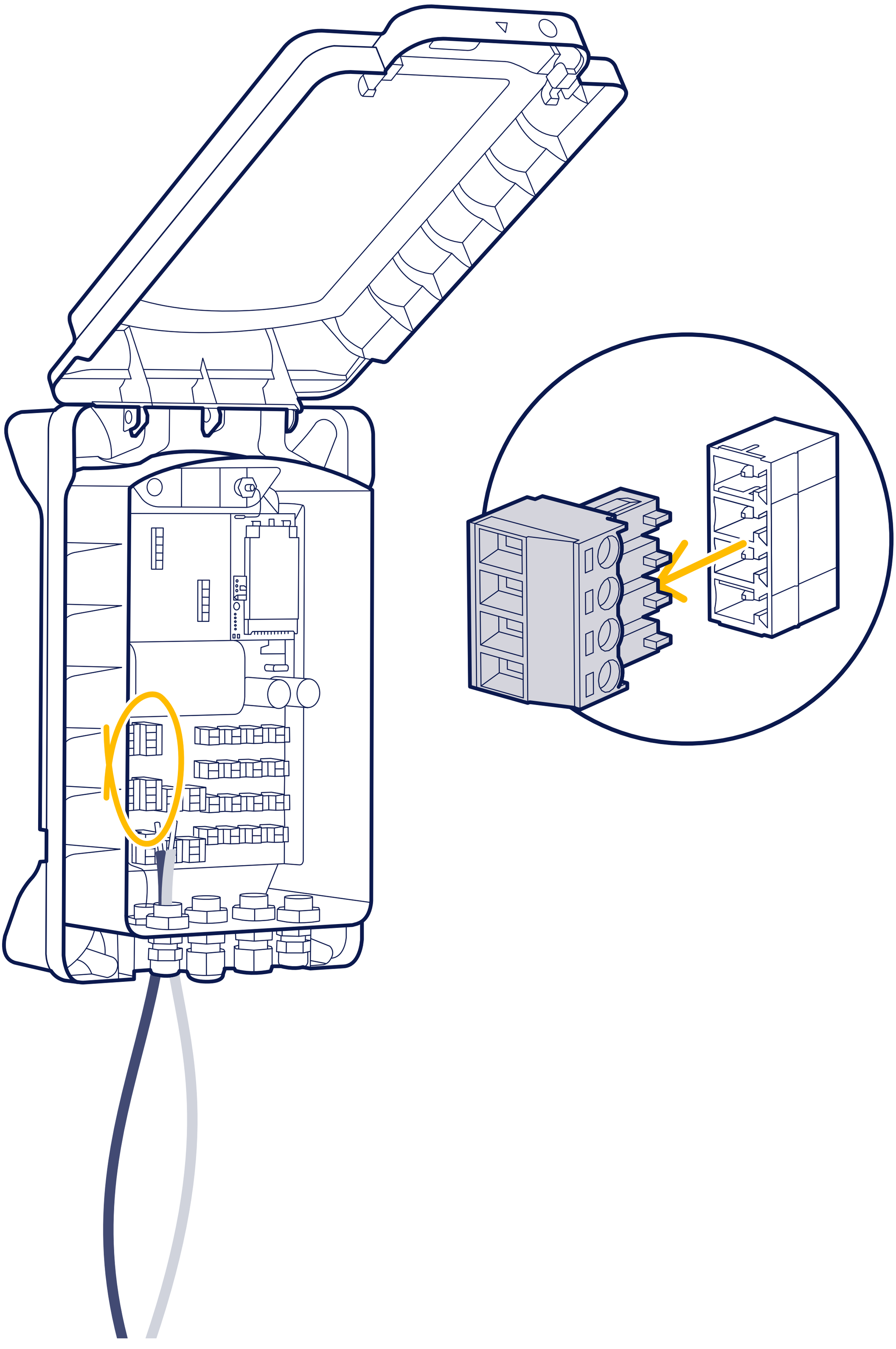

Wire your GrowSphere™ FLEX

Digital Input – Wiring

4. unscrew the small screw on the side of the connector, insert the wire, and tighten it back

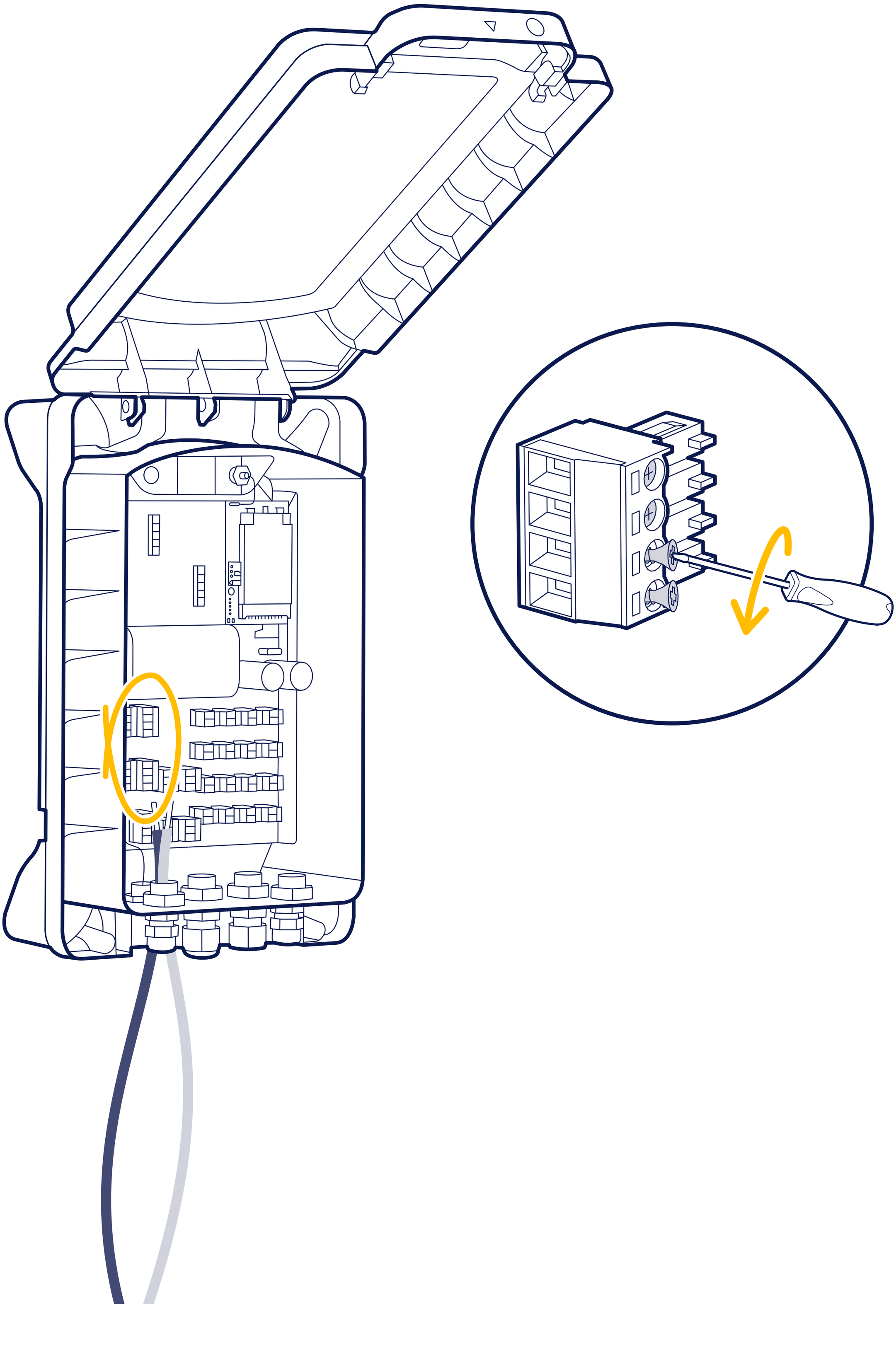

Wire your GrowSphere™ FLEX

Digital Input – Wiring

5. Insert the device wires into the appropriate terminals as defined in the **General info**

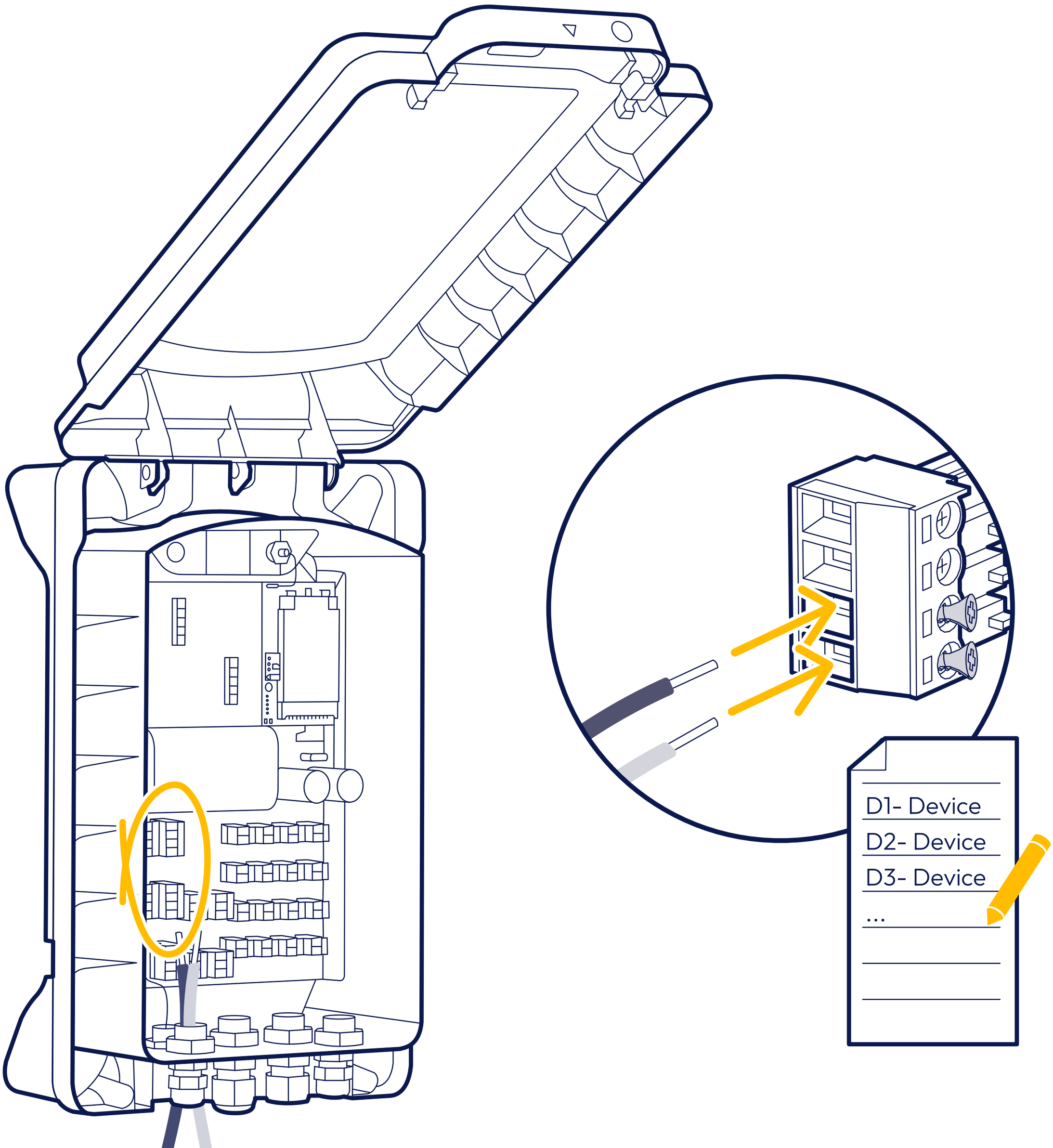

*For explanation how to wire different devices go to page 14

Wire your GrowSphere™ FLEX

Digital Input – Wiring

6. Tighten the screws to secure the wires

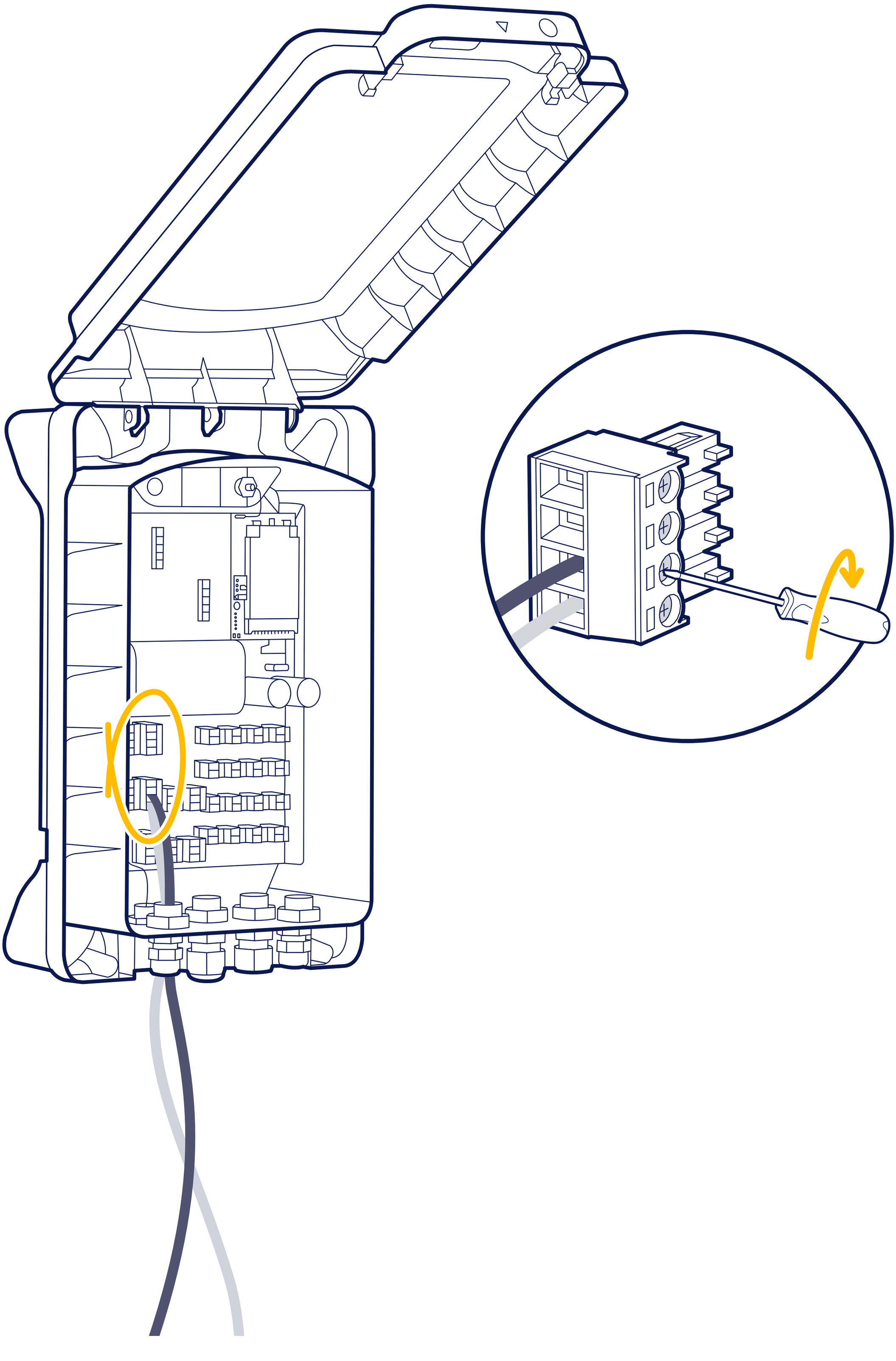

Wire your GrowSphere™ FLEX

Digital Output - Wiring

7. DC valves – Connect the valve wires to the digital output's ports, following the + and - markings.

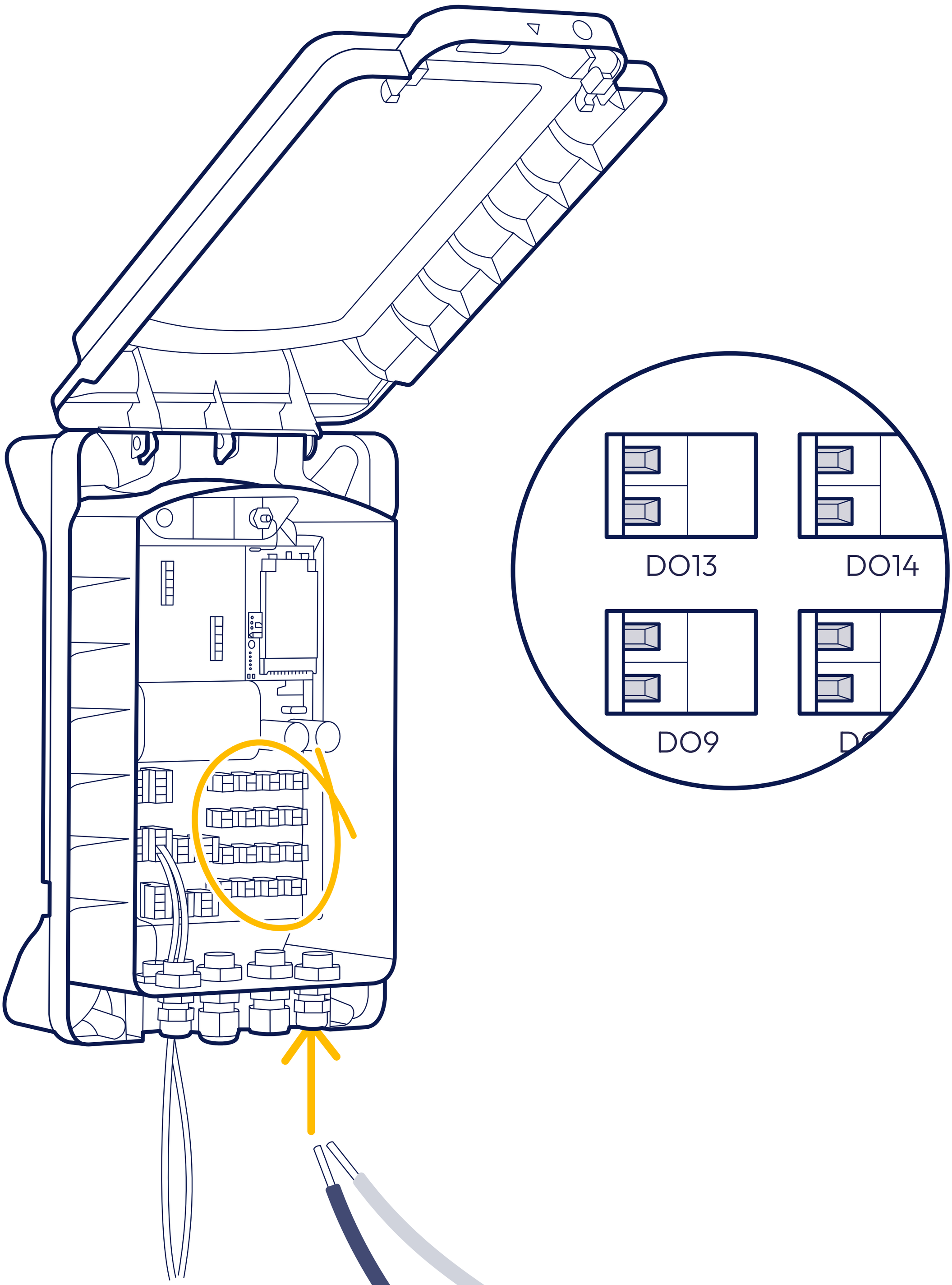

Wire your GrowSphere™ FLEX

Digital Output - Wiring

8. DC valves – Connect the valve wires to the digital output's ports, following the + and - markings.

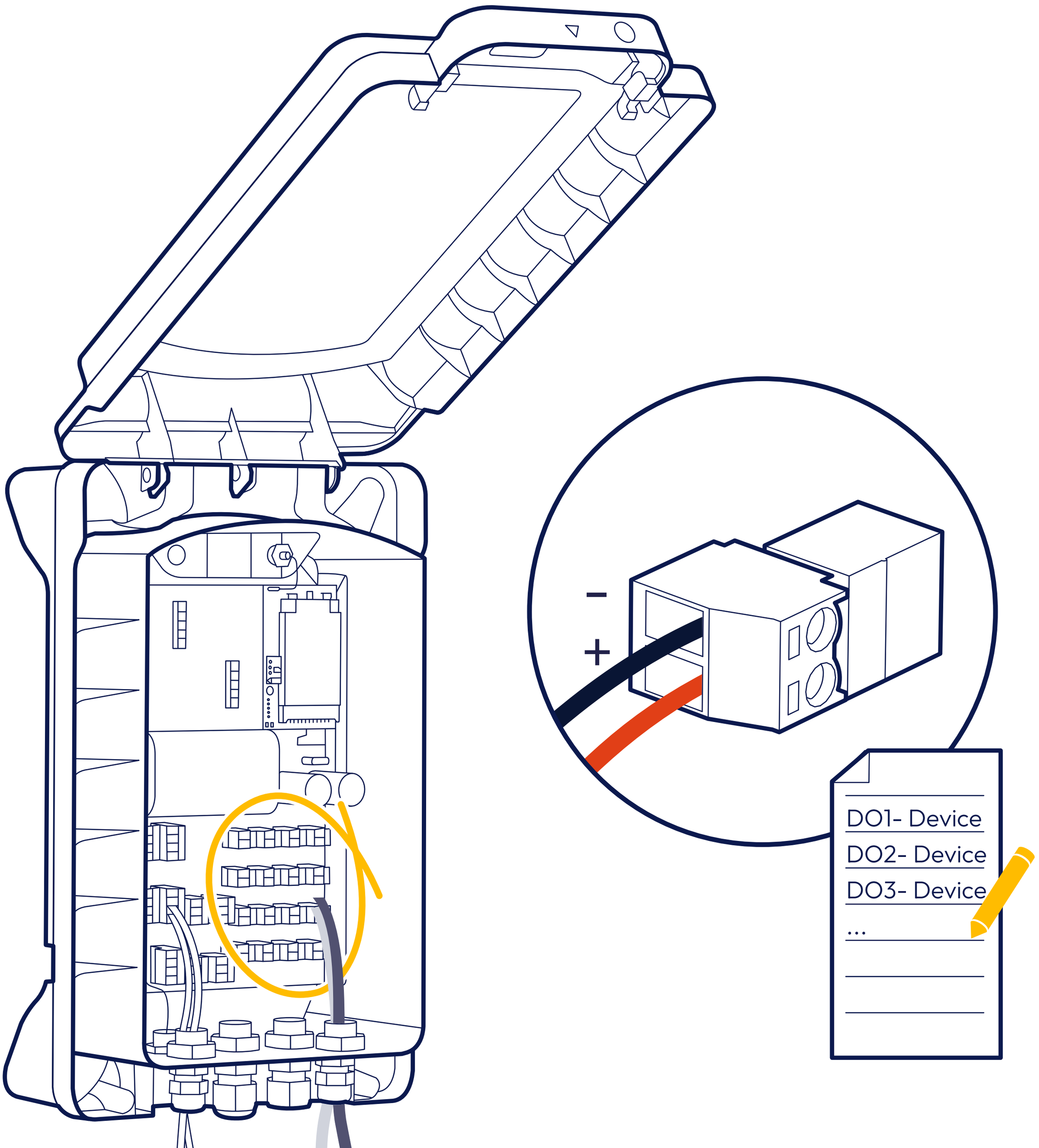

Wire your GrowSphere™ FLEX

Analog Input - General info

- Each analog input terminal includes a:
  - Positive power supply port (+)

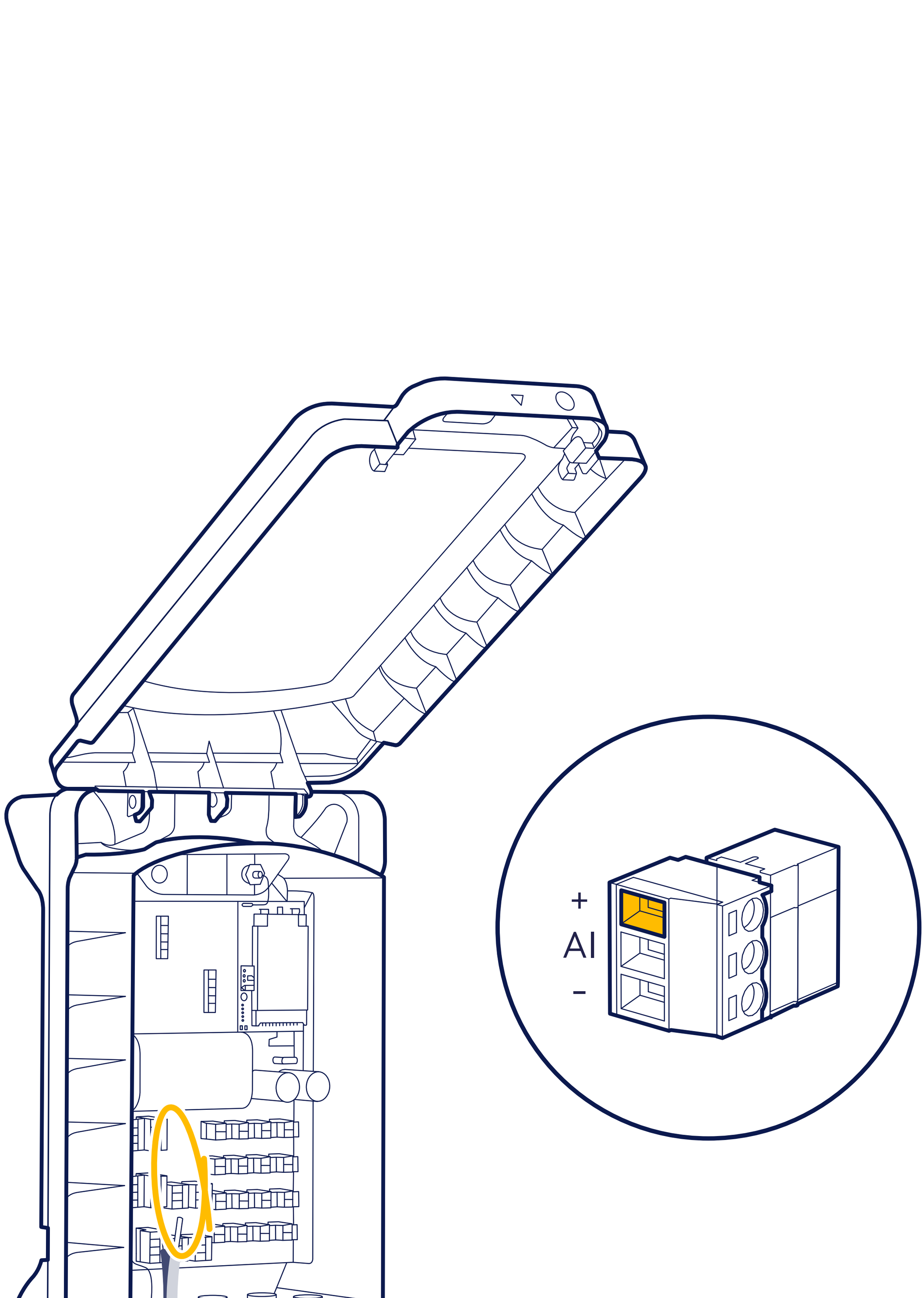

Wire your GrowSphere™ FLEX

Analog Input - General info

- Each analog input terminal includes a:
  - Positive power supply port (+)
  - Analog port (AI)

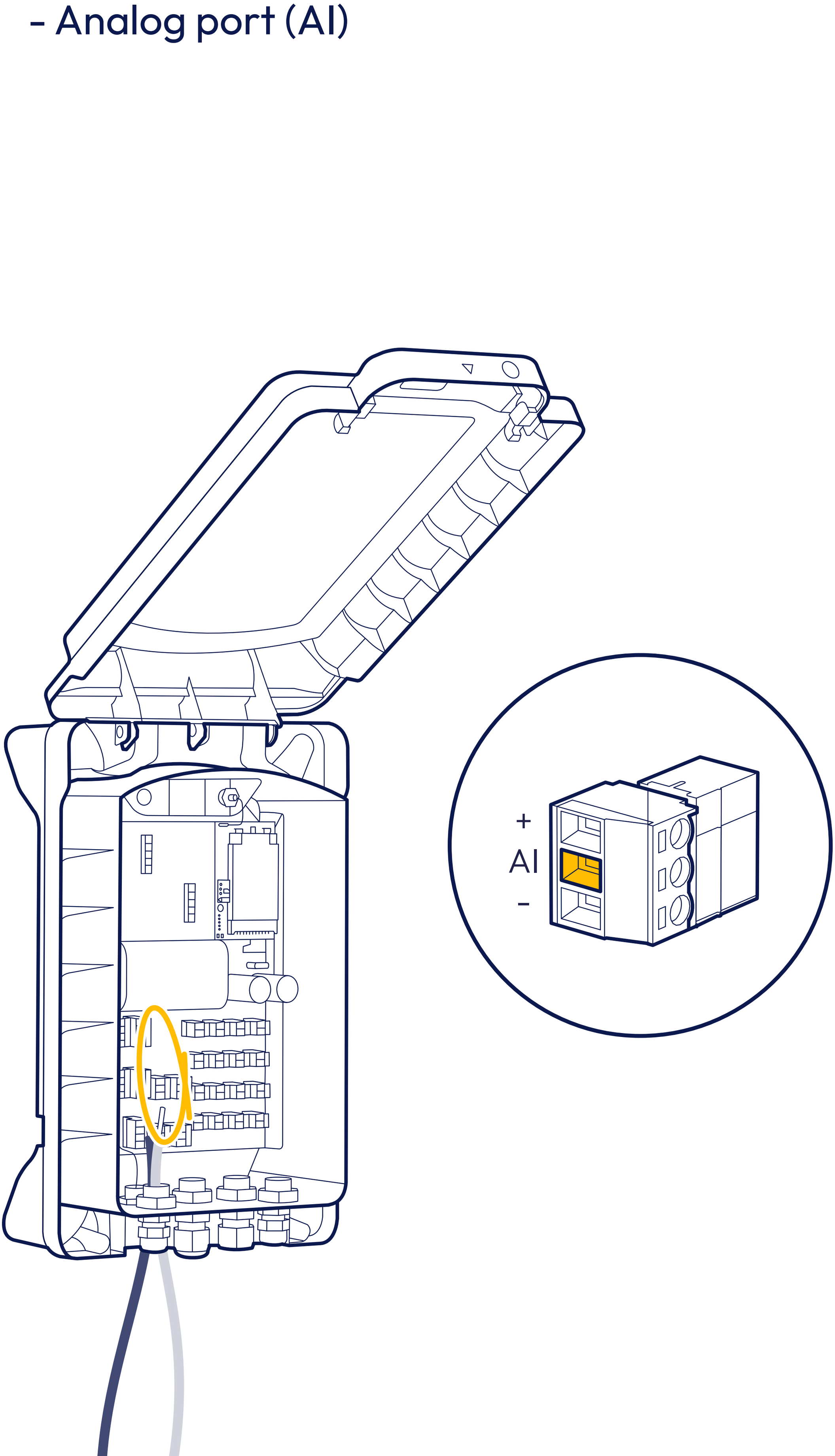

Wire your GrowSphere™ FLEX

Analog Input - General info

- Each analog input terminal includes a:
  - Positive power supply port (+)
  - Analog port (AI)
  - Ground (-)

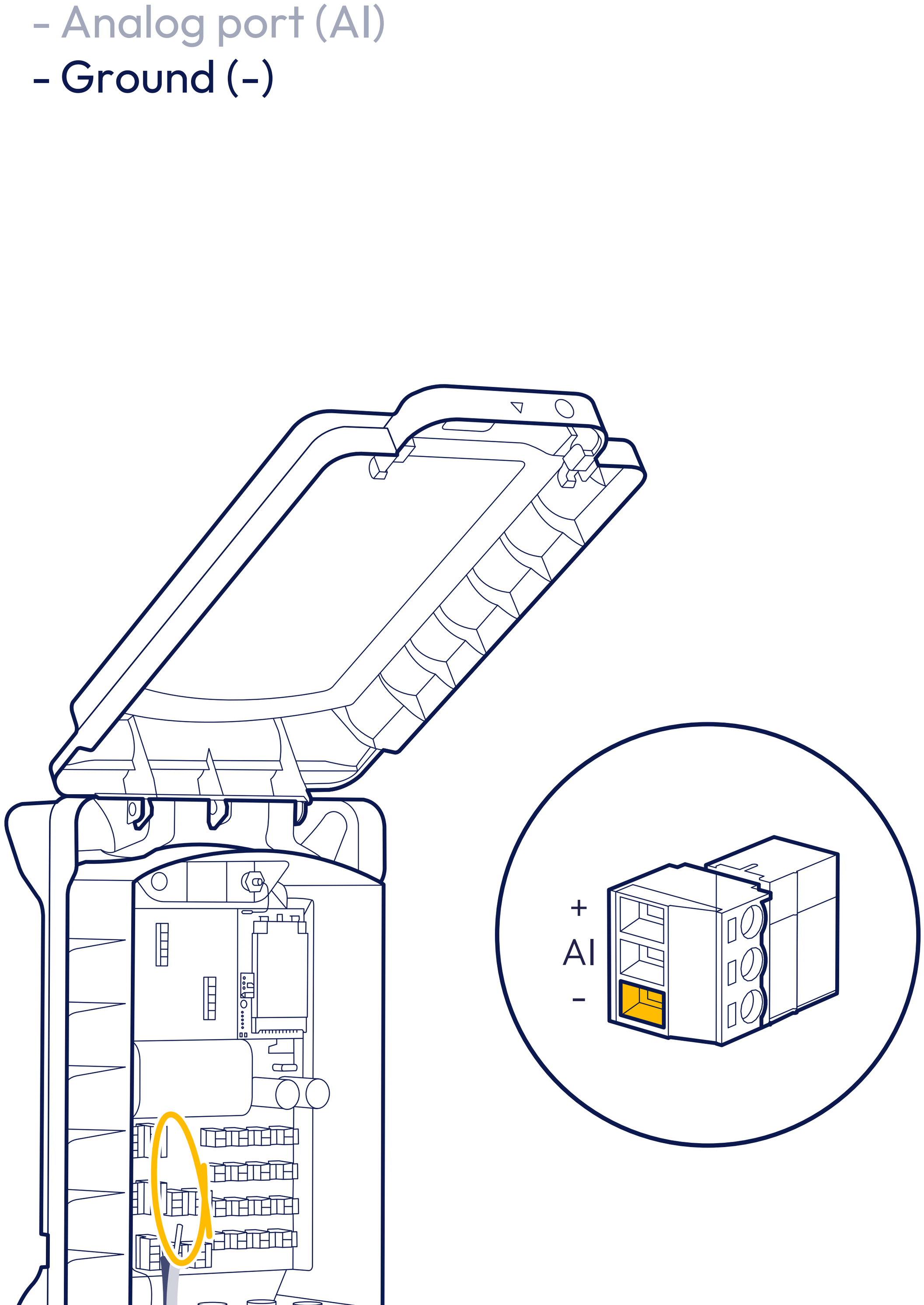

Wire your GrowSphere™ FLEX

Analog Input - Wiring

Netafim analog pressure sensors should be wired as shown.

For other sensors, follow the manufacturer’s instructions and use the correct port.

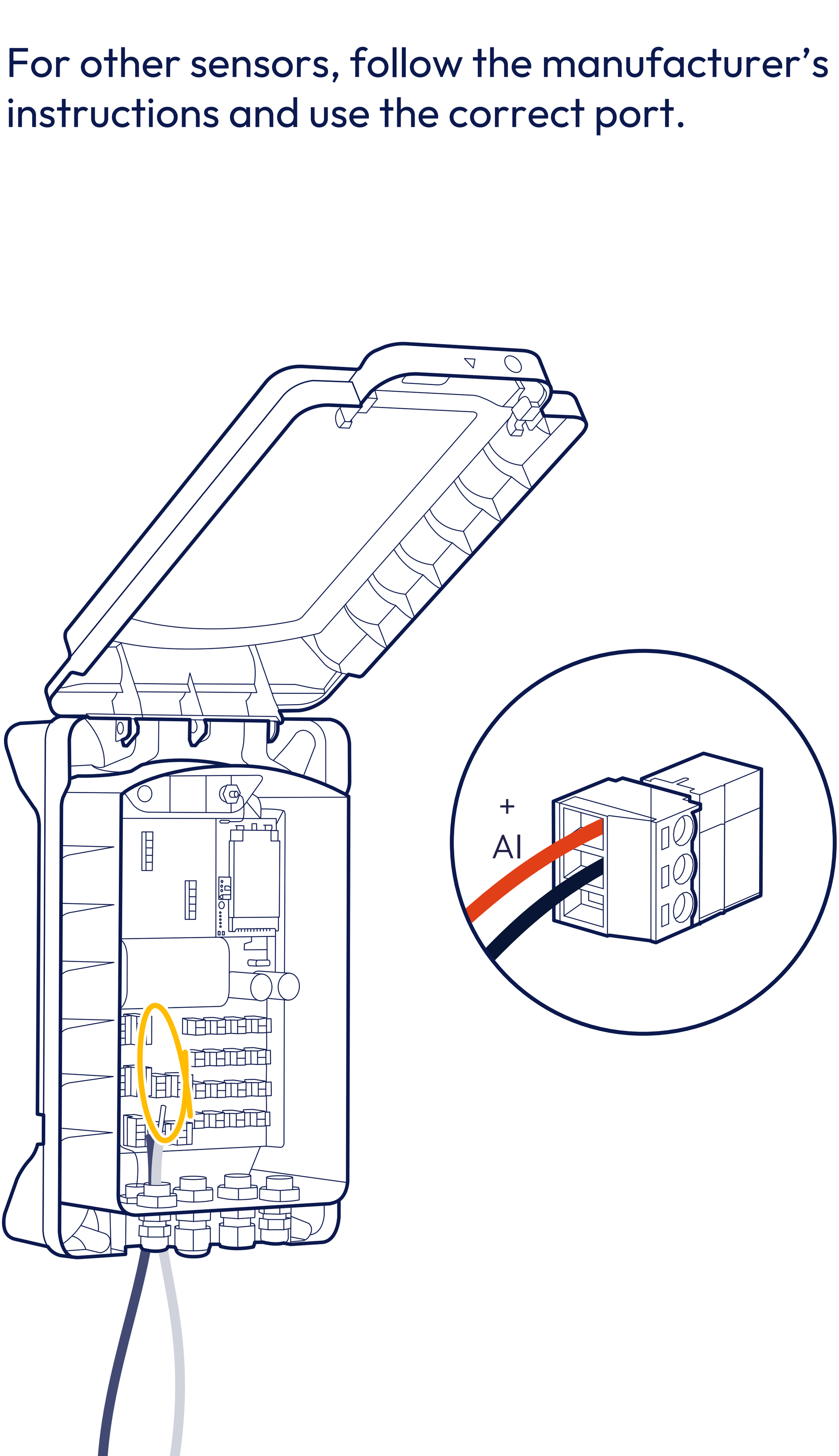

Wire your GrowSphere™ FLEX

Analog Input – Pressure Sensor Configuration

- **Input type:** 4–20 mA or 0–5 V
- **Sample time:** Time the sensor receives a feed to take a measurement. Default: 100 ms (Netafim sensor). For other sensors, follow the manufacturer's instructions.
- **Feed:** Sensor supply voltage. Default: 12,000 mV (Netafim sensor). For other sensors, follow the manufacturer's instructions.
  FLEX supports pressure sensors with a feed of up to 15,000 mV.
- **4 mA / 0 V and 20 mA / 5 V values:** Define the sensor's MIN/MAX pressure range. Netafim sensors measure 0–10 bar.

Wire your GrowSphere™ FLEX

Analog Input - Pressure Sensor in Mobile App

App Installation

1. Download / Open **Grow**Shpere™ app

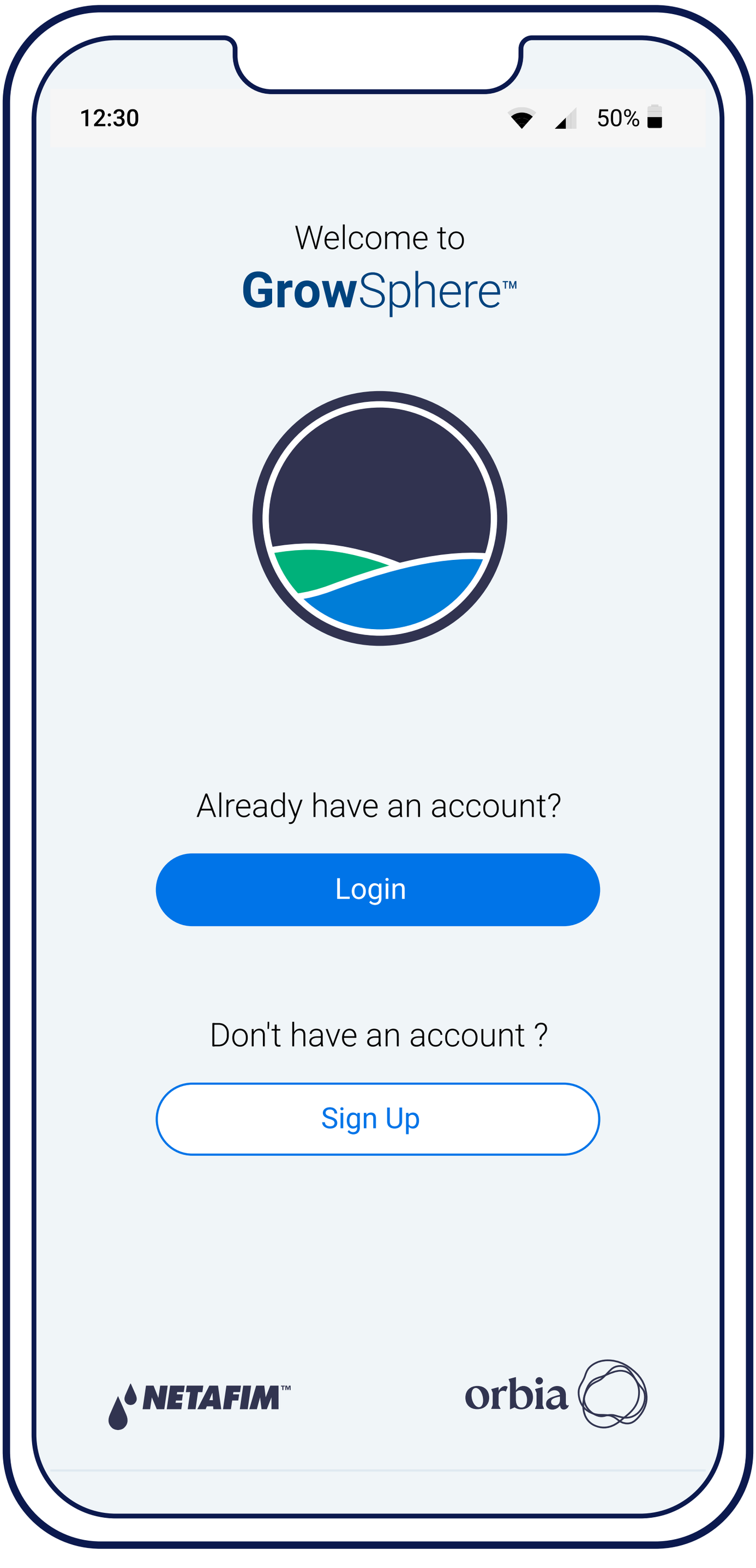

App Installation

2. Create a new farm / Open your exiting farm

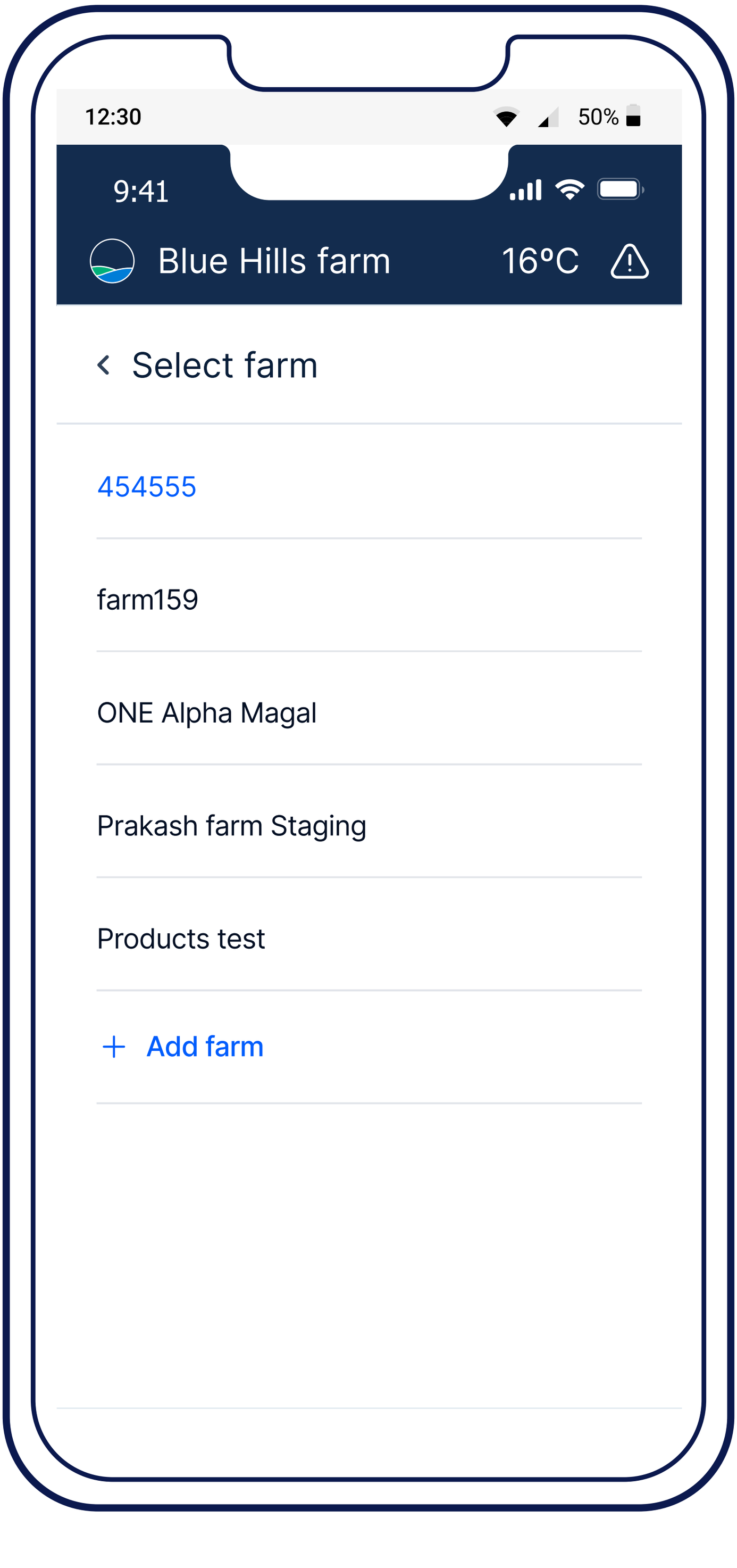

App Installation

3. Add the FLEX as a new device
(scan / enter a code)

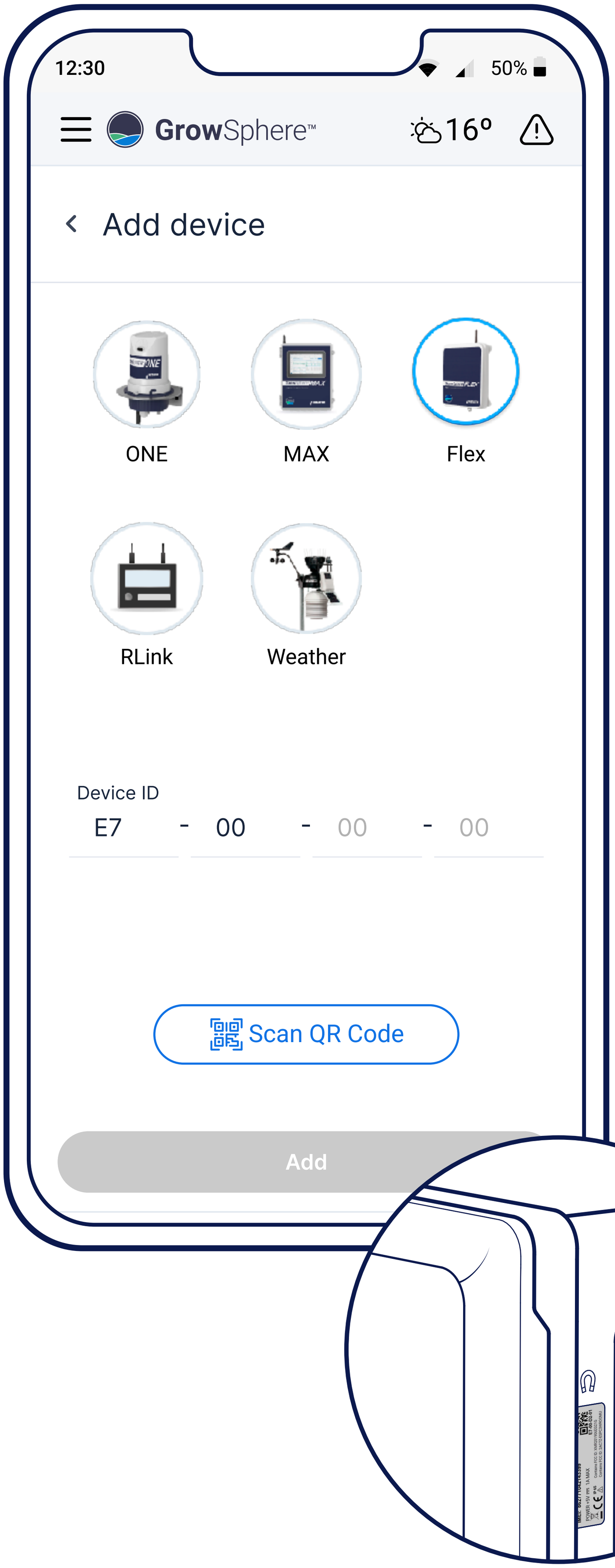

App Installation

4. Define input / output wired instruments,
set the parameters + test

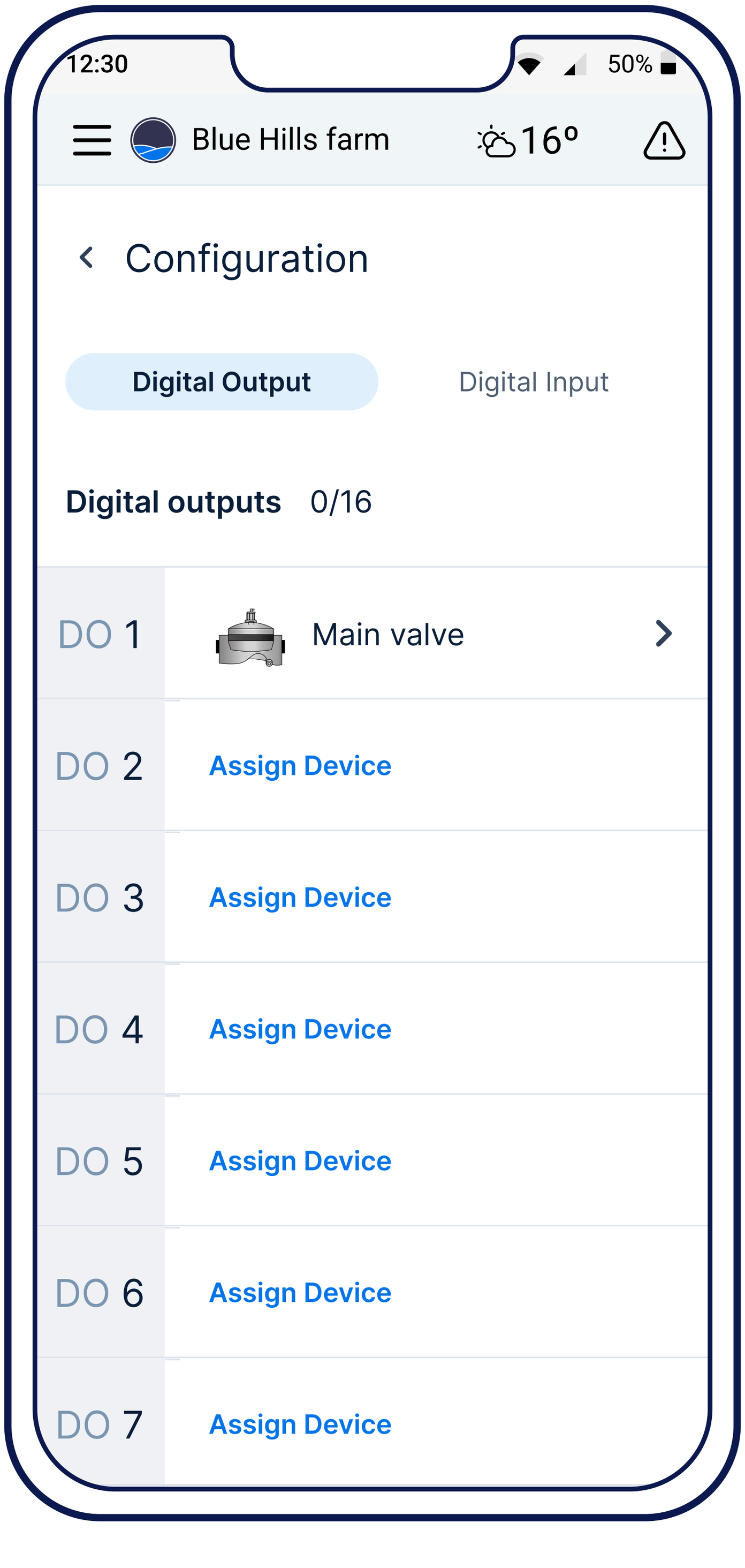

App Installation

5. Define and configure specific device parameters for each connected instrument

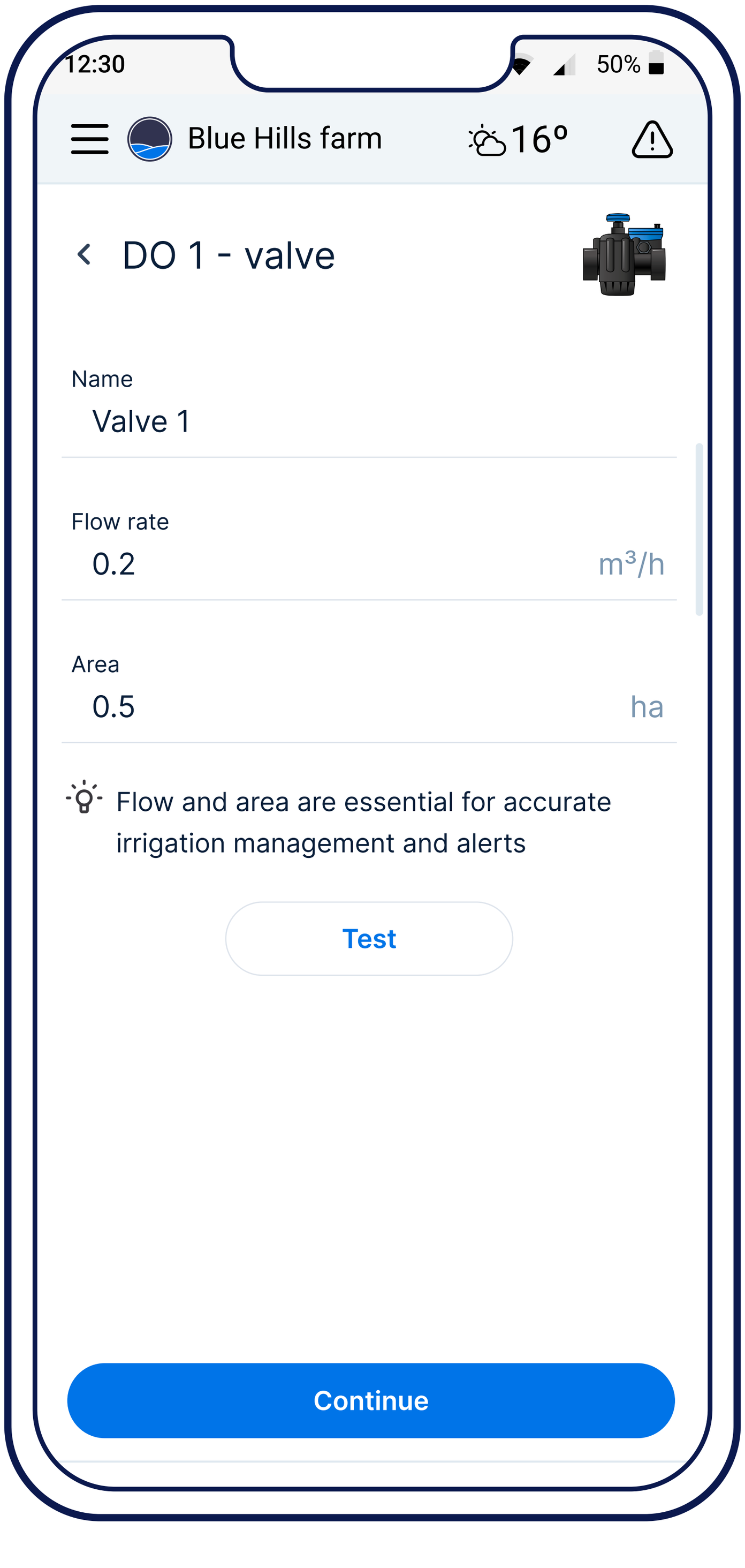

Recommended Procedure :
Valve Configuration & Flow Validation.

Follow these steps to complete the configuration for newly installed valves (when water meters are also installed).

App Installation

5. Define and configure specific device parameters for each connected instrument

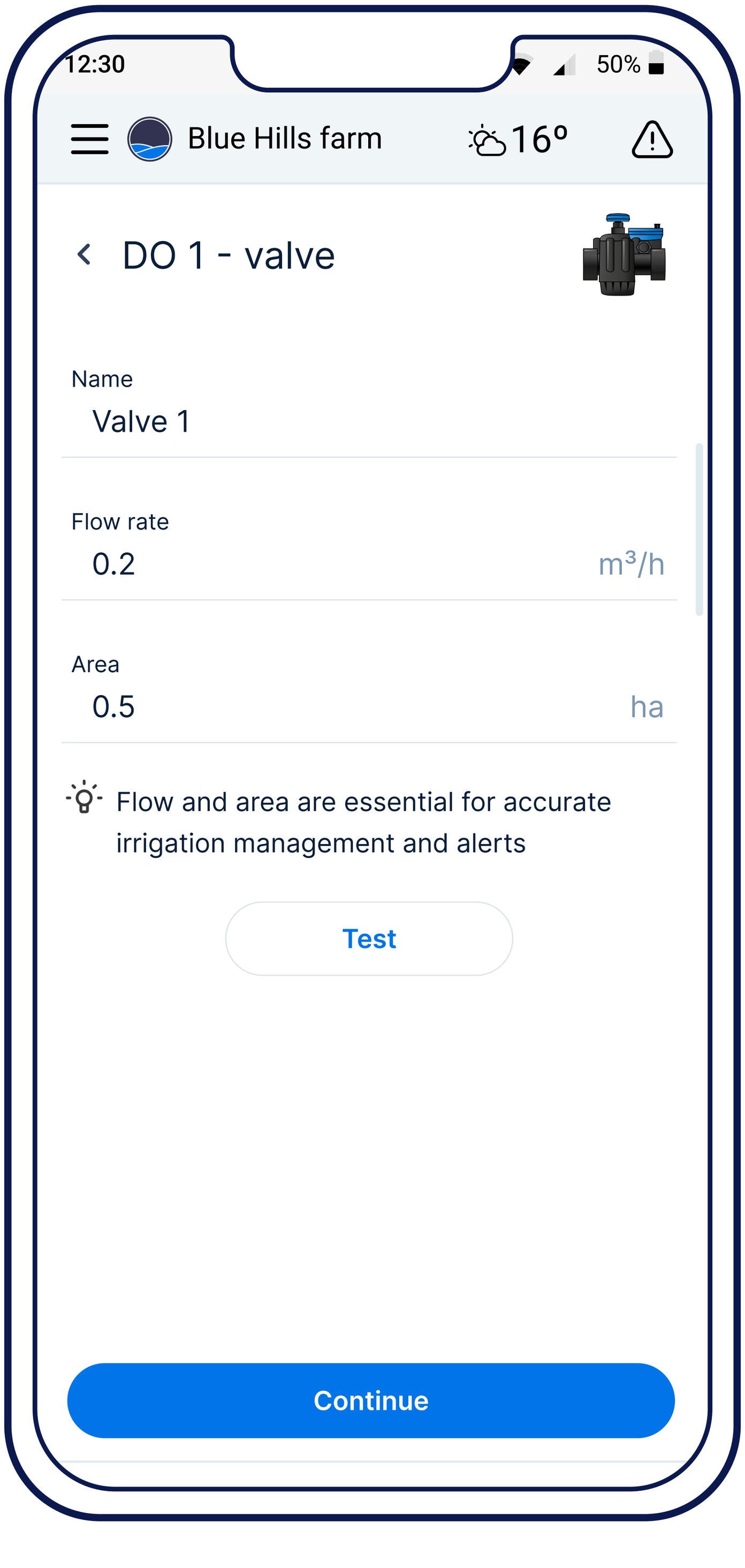

Disable Alerts: Set flow alerts to INACTIVE to prevent false notifications during the calibration phase.

App Installation

5. Define and configure specific device parameters for each connected instrument

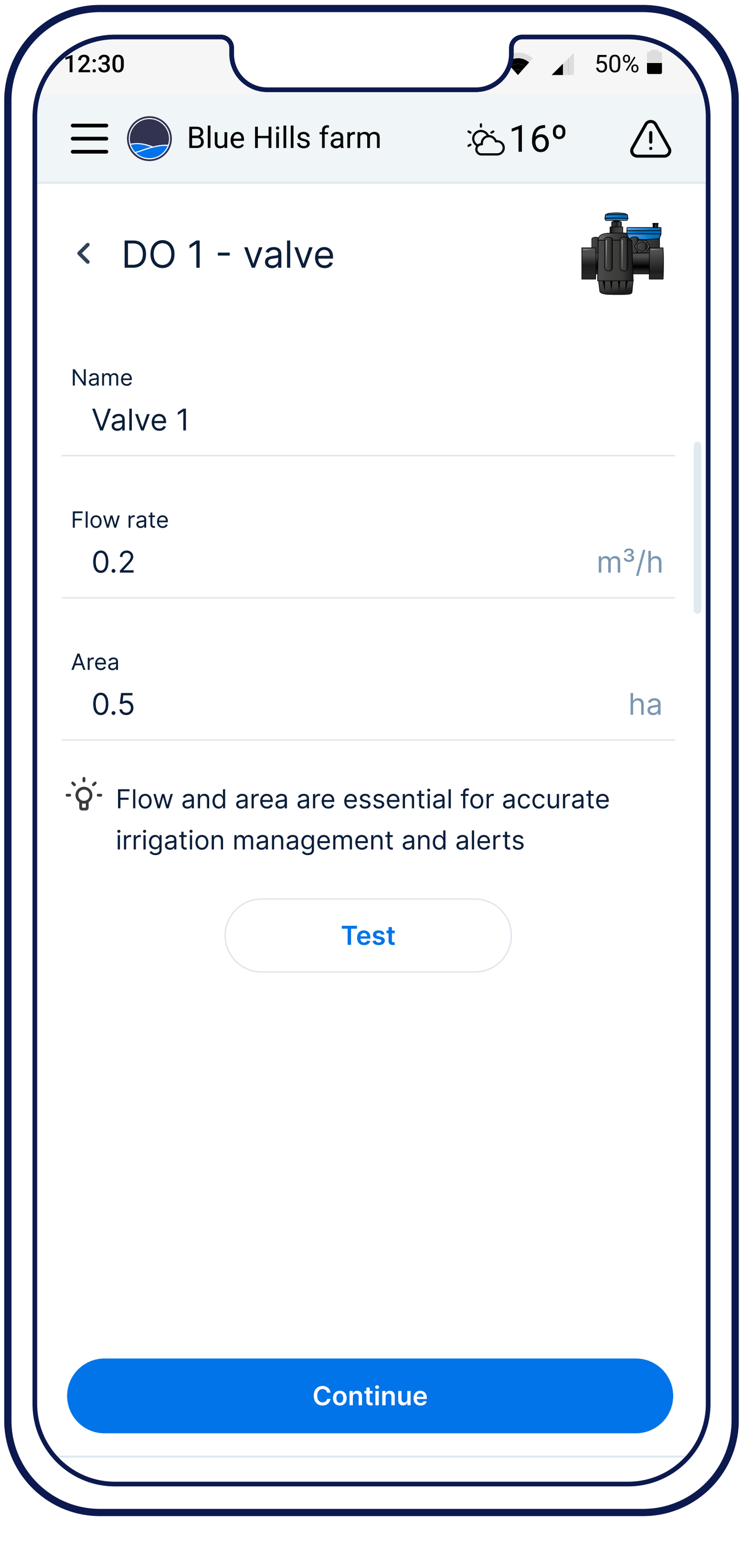

Configure the Irrigation Program:

- Assign each valve to a separate shift.
- Run the irrigation program until the flow rate stabilizes.

App Installation

5. Define and configure specific device parameters for each connected instrument

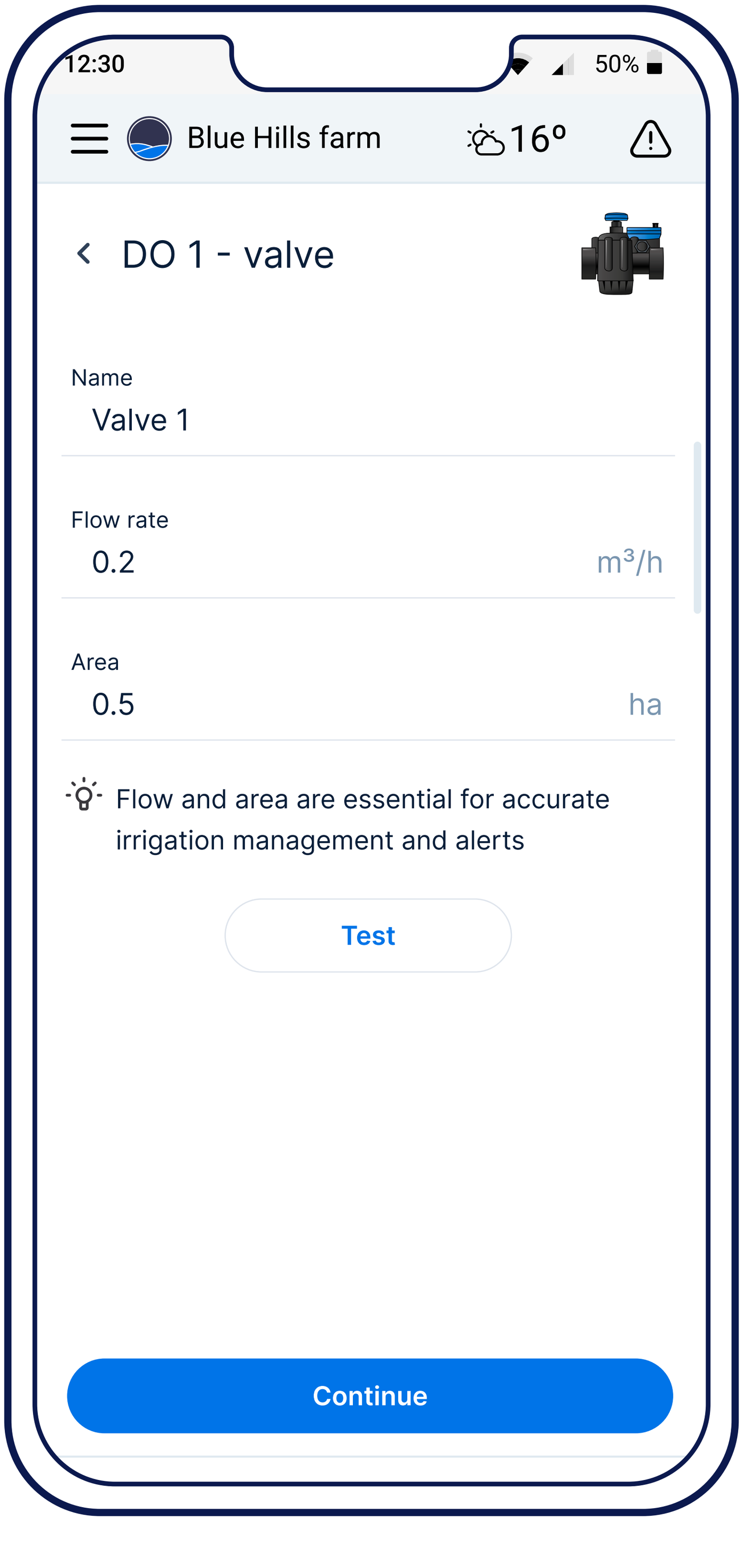

Monitor Output: Observe the actual, real-time flow rate displayed for each valve.

App Installation

5. Define and configure specific device parameters for each connected instrument

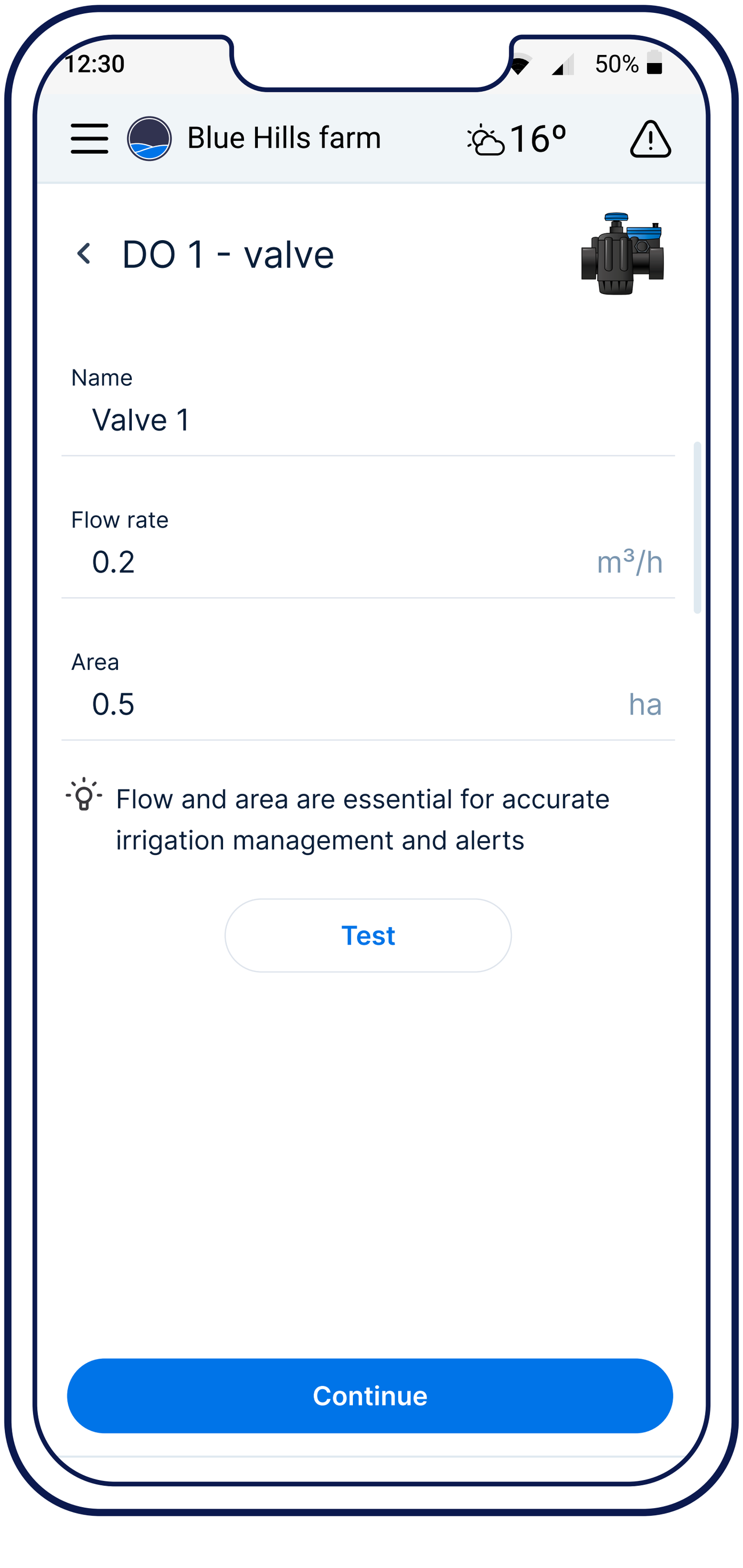

Validate Data: Confirm that the measured flow values align with the parameters defined in the valve configuration.

App Installation

5. Define and configure specific device parameters for each connected instrument

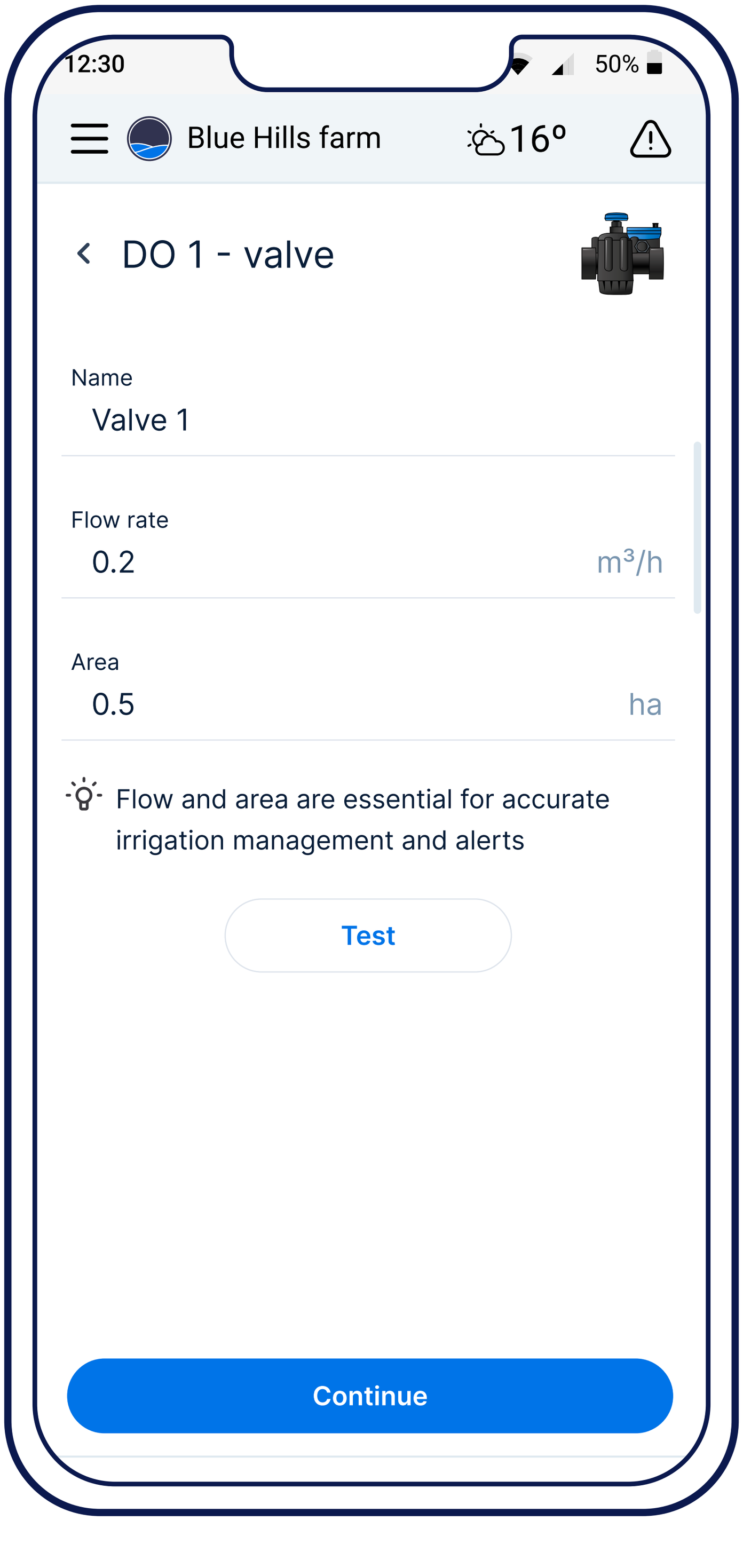

Restore Alerts: Re-enable flow alerts once the configuration and validation are complete.

App Installation

6. Customize Your FLEX Settings

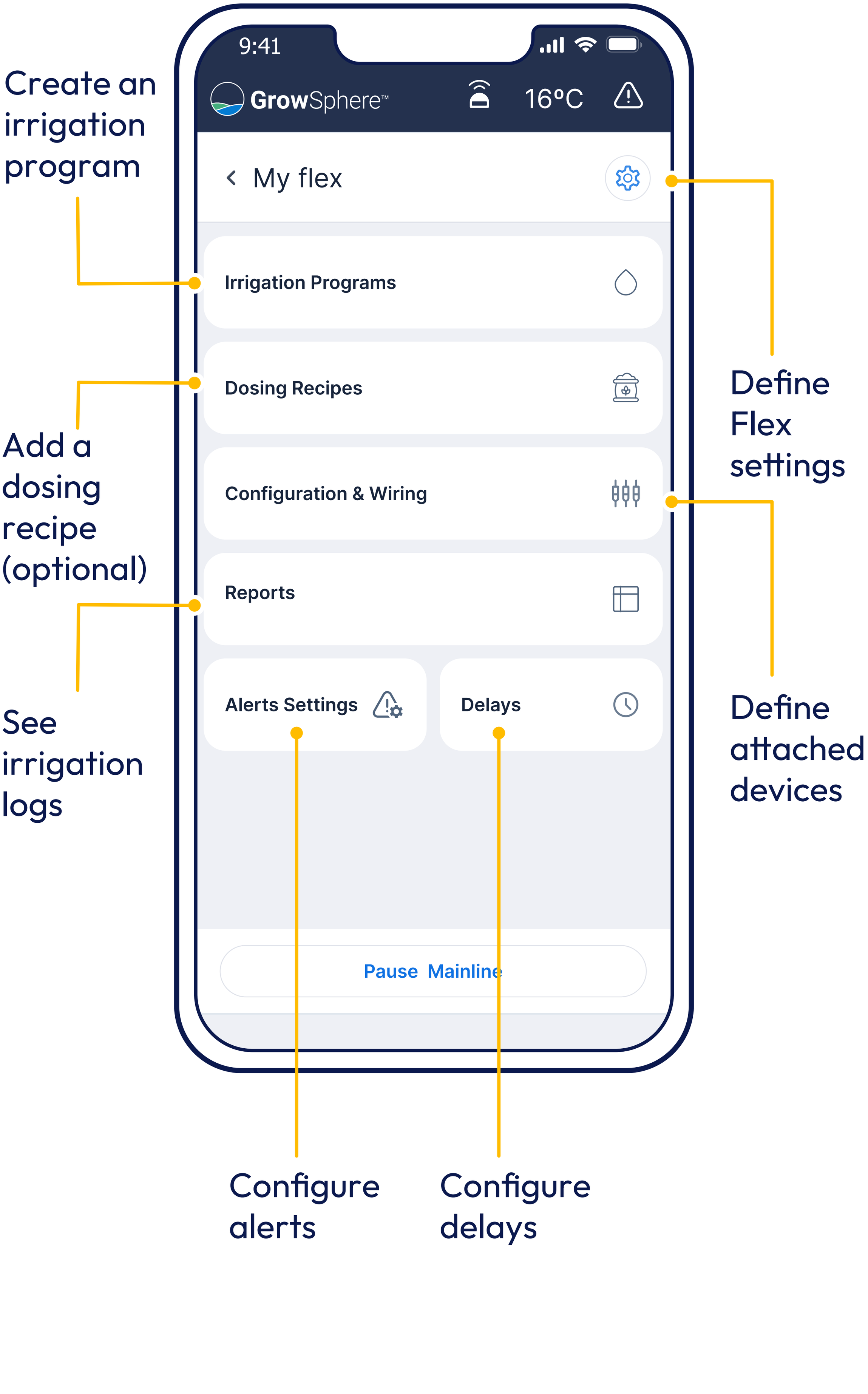

App Installation

7. Set alerts

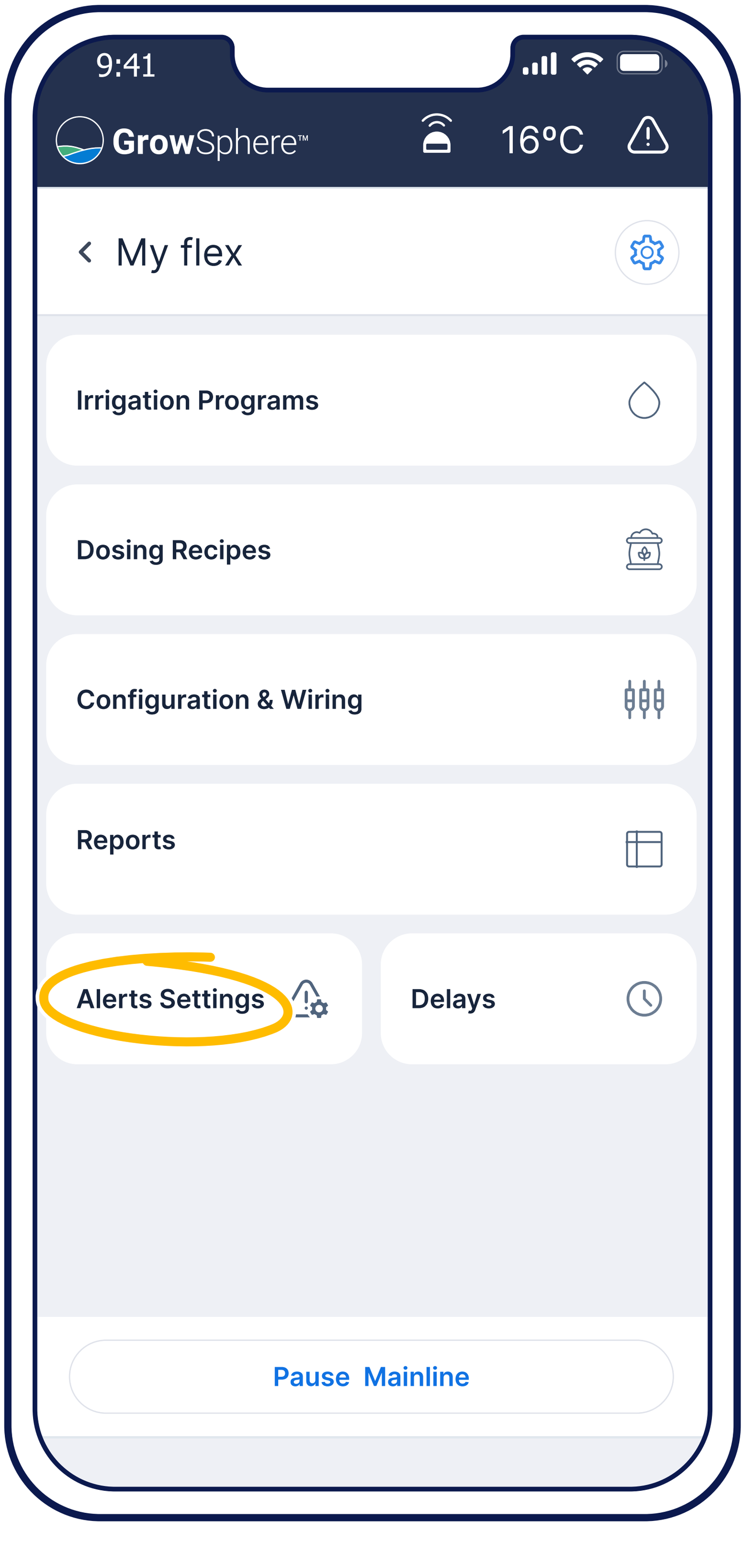

Access the ALERTS menu from the main FLEX dashboard

App Installation

7. Set alerts

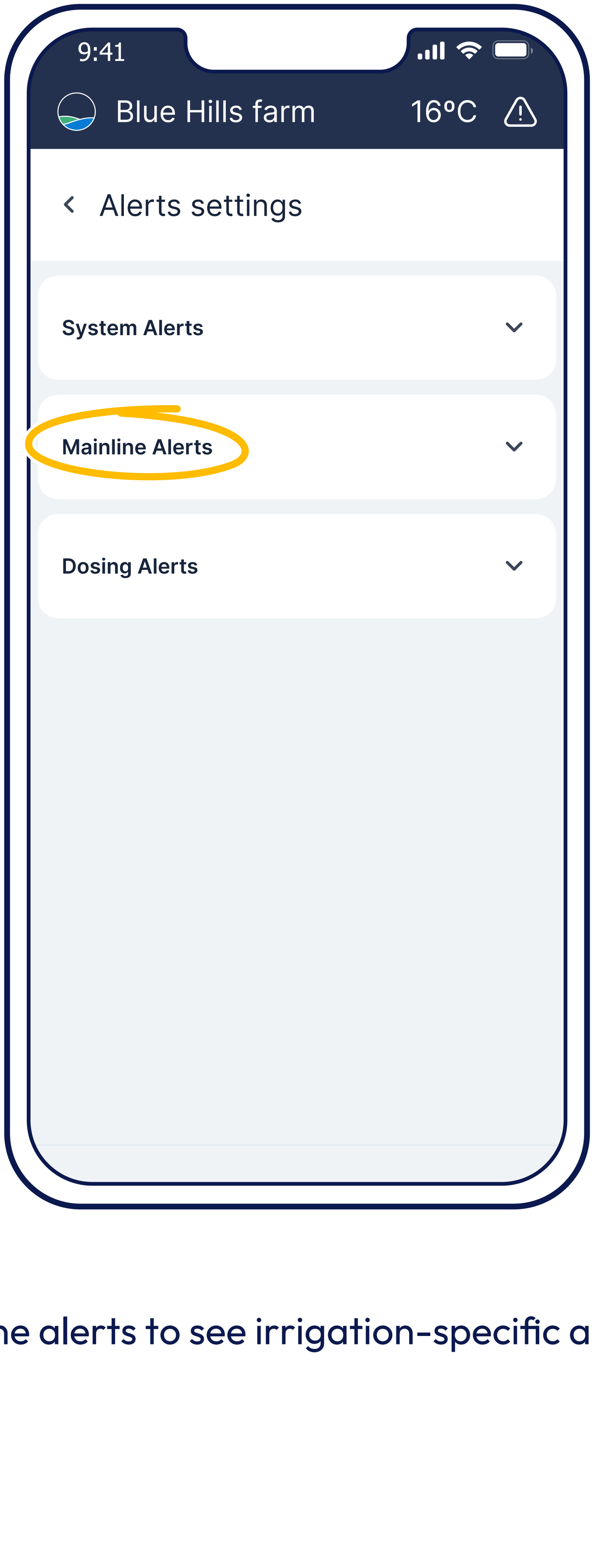

Tap Mainline alerts to see irrigation-specific alerts

App Installation

7. Set alerts

Select the specific alarm type, e.g. High flow

App Installation

7. Set alerts

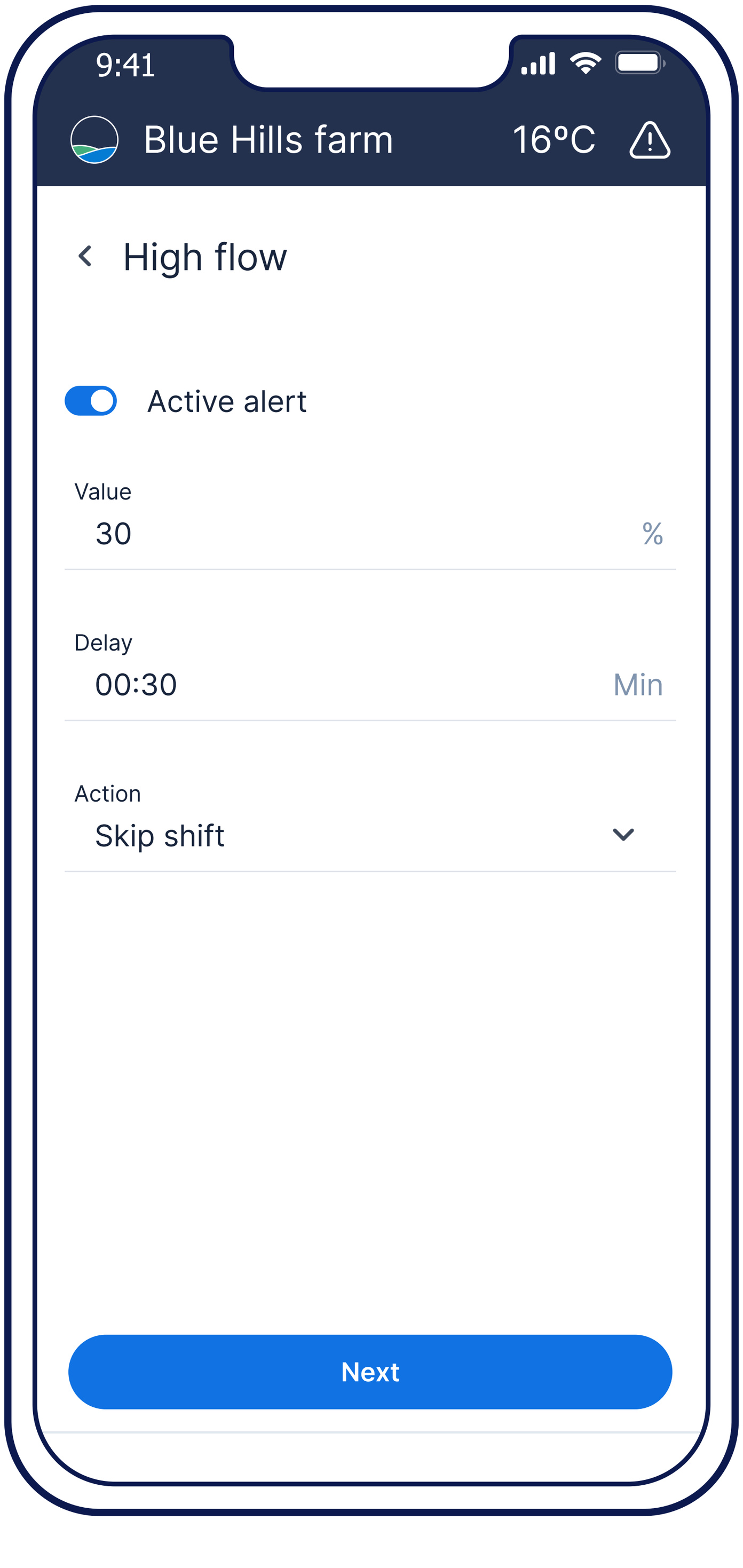

- Enable or disable this specific alert.

App Installation

7. Set alerts

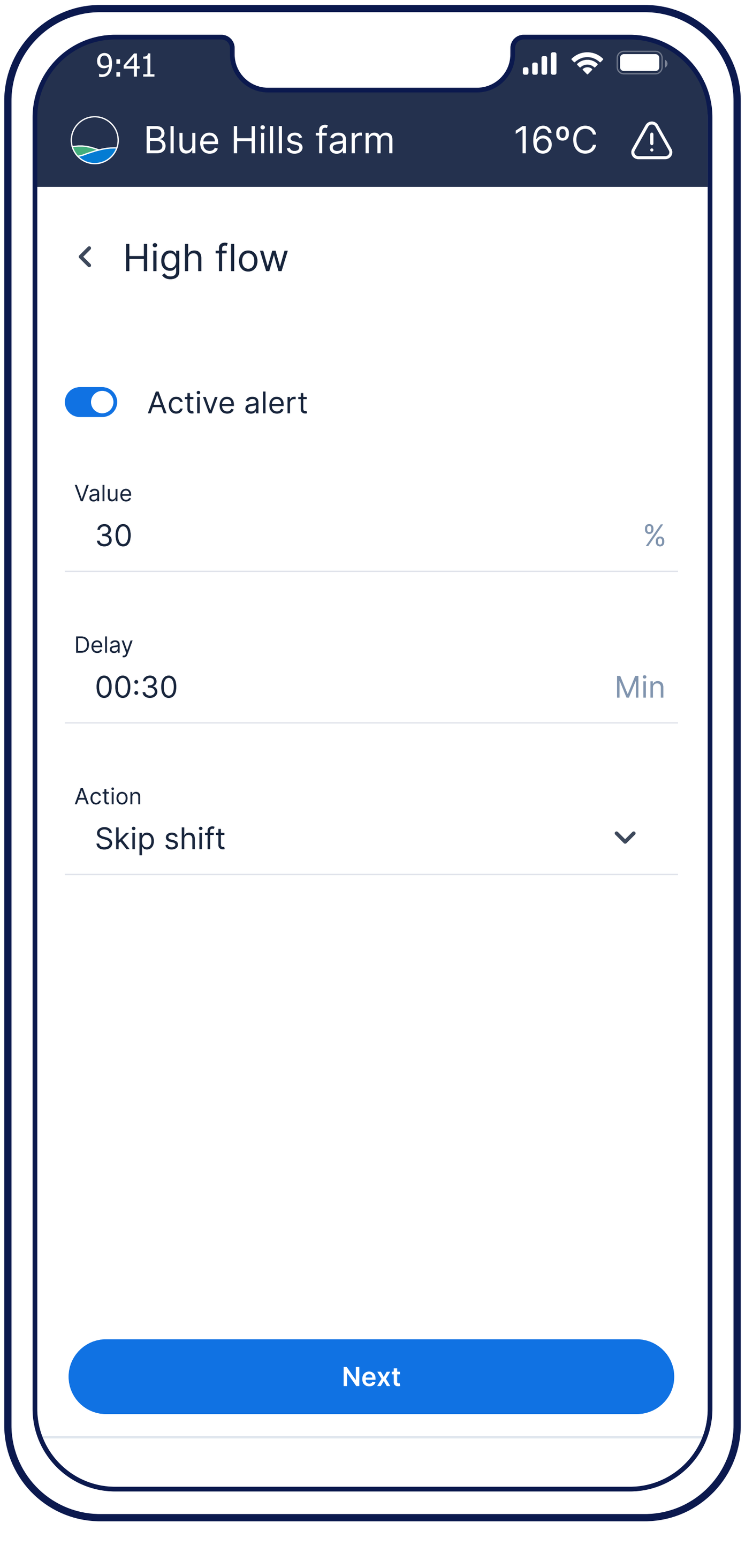

- Enable or disable this specific alert.
- Percentage above the expected flow rate to trigger the alert.

App Installation

7. Set alerts

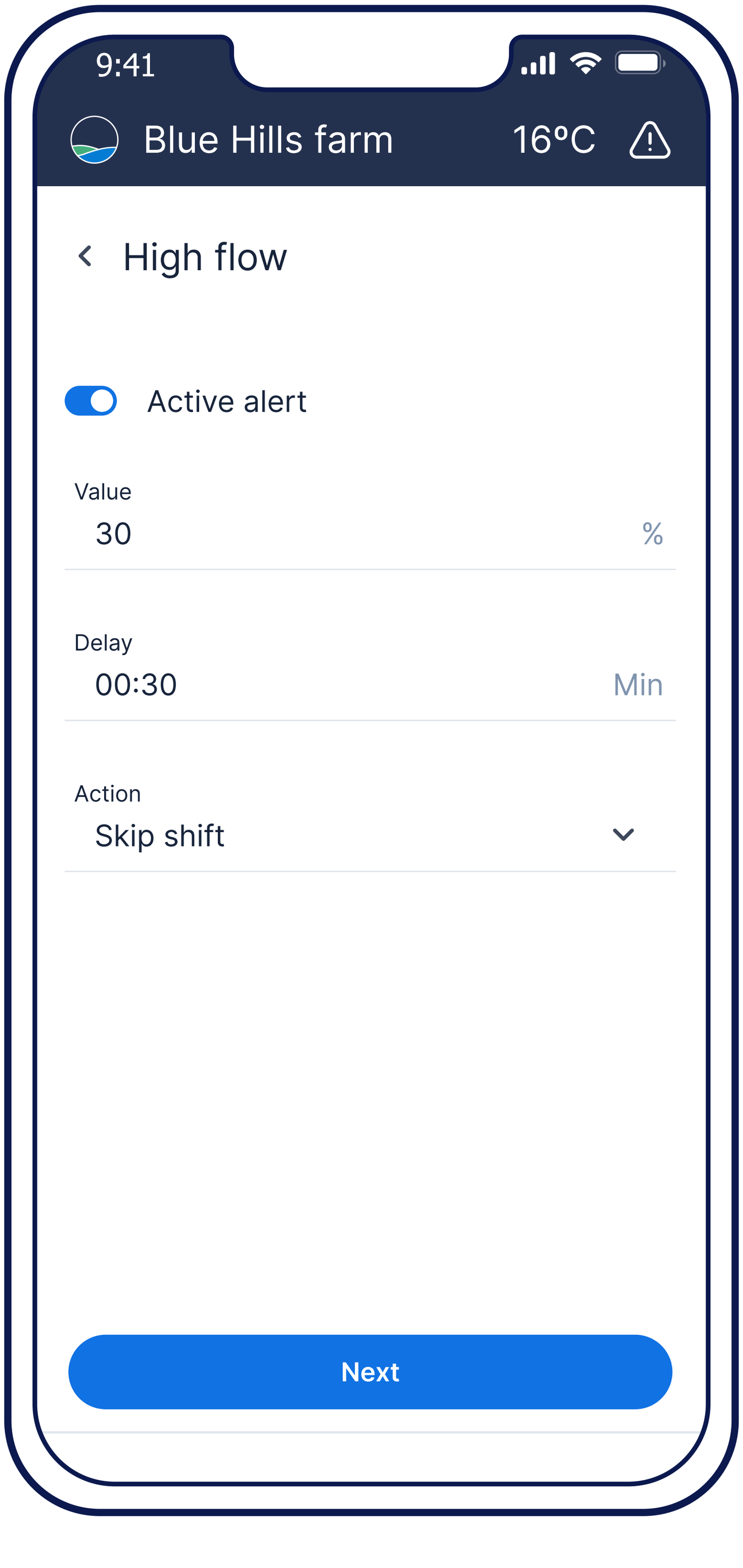

- Enable or disable this specific alert.
- Percentage above the expected flow rate to trigger the alert.
- Time duration before the alert is activated.

App Installation

7. Set alerts

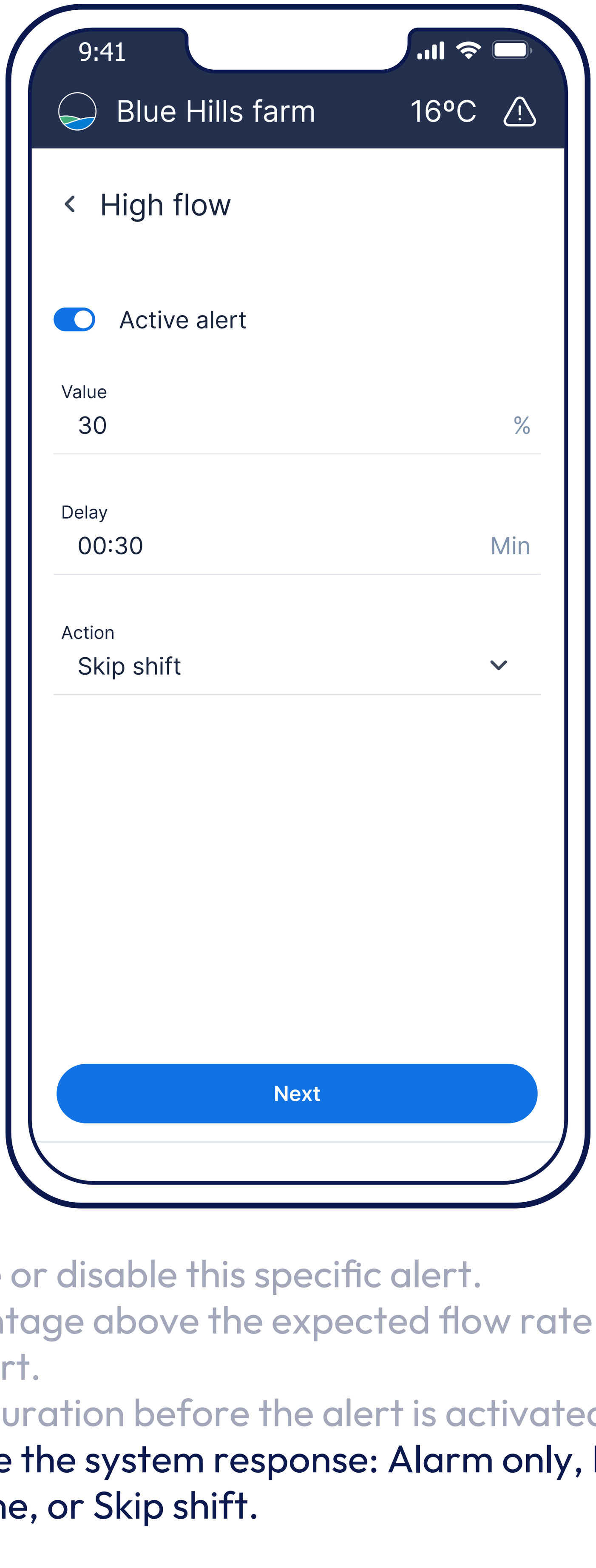

- Enable or disable this specific alert.
- Percentage above the expected flow rate to trigger the alert.
- Time duration before the alert is activated.
- Choose the system response: Alarm only, Pause mainline, or Skip shift.

App Installation

NETAFIM™
An Orbia business.

GrowSphere™
Operating System

Talk to us — we're here to help.
For resources, guides, documentation, FAQs, videos, and support:
GrowSphere Support Center

Need technical help?
Open a support ticket directly:
GrowSphere Support Ticket

Whether you need troubleshooting, onboarding help, product information, or assistance getting the most out of GrowSphere™, our team is ready to support you.